HEWLETT-PACKARD

HP-67/HP-97

Users' Library Solutions

Geometry

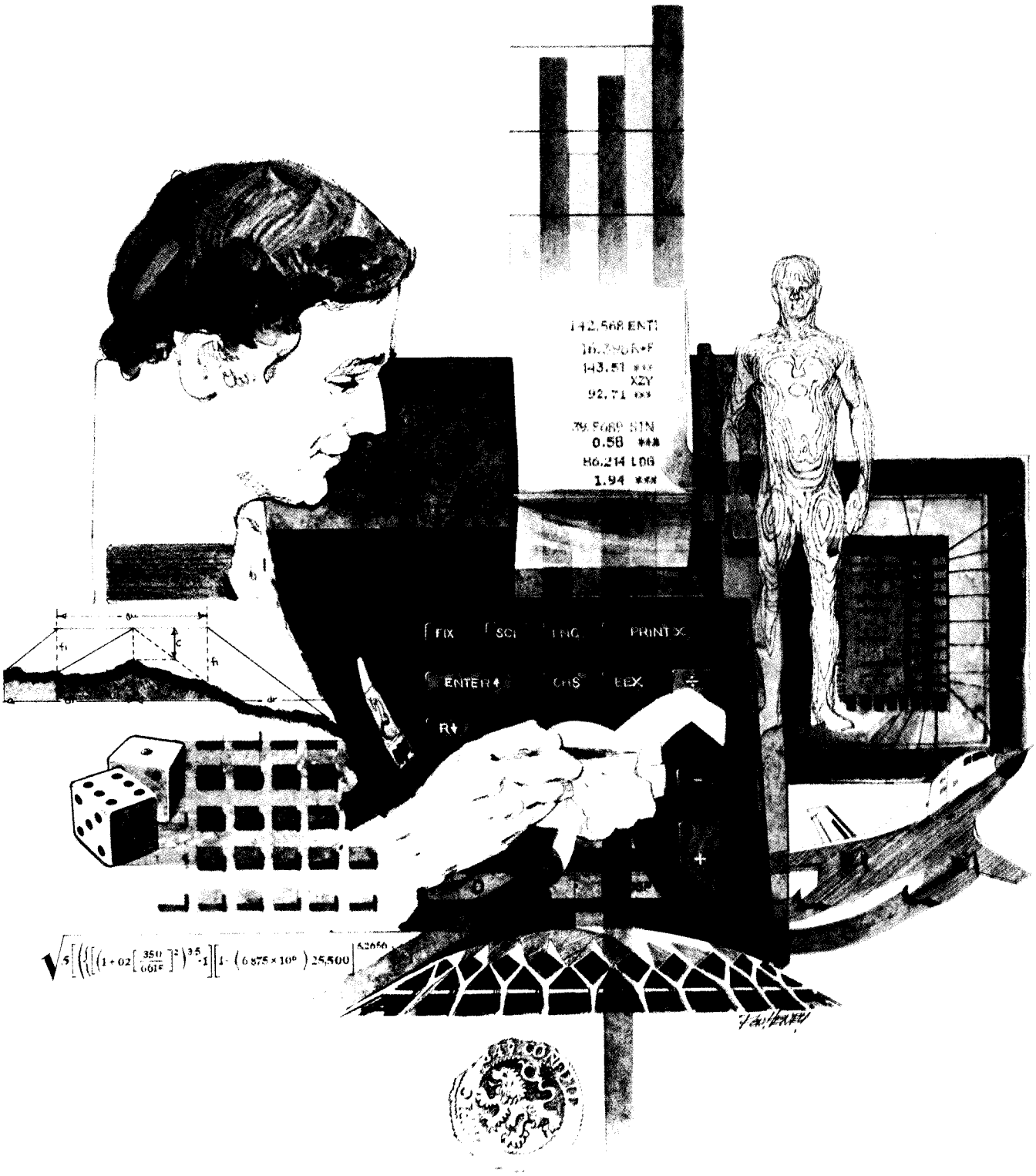

INTRODUCTION

In an effort to provide continued value to it's customers, Hewlett-Packard is introducing a unique service for the HP fully programmable calculator user. This service is designed to save you time and programming effort. As users are aware, Programmable Calculators are capable of delivering tremendous problem solving potential in terms of power and flexibility, but the real genie in the bottle is program solutions. HP's introduction of the first handheld programmable calculator in 1974 immediately led to a request for program **solutions** — hence the beginning of the HP-65 Users' Library. In order to save HP calculator customers time, users wrote their own programs and sent them to the Library for the benefit of other program users. In a short period of time over 5,000 programs were accepted and made available. This overwhelming response indicated the value of the program library and a Users' Library was then established for the HP-67/97 users.

To extend the value of the Users' Library, Hewlett-Packard is introducing a unique service—a service designed to save you time and money. The Users' Library has collected the best programs in the most popular categories from the HP-67/97 and HP-65 Libraries. These programs have been packaged into a series of low-cost books, resulting in substantial savings for our valued HP-67/97 users.

We feel this new software service will extend the capabilities of our programmable calculators and provide a great benefit to our HP-67/97 users.

A WORD ABOUT PROGRAM USAGE

Each program contained herein is reproduced on the standard forms used by the Users' Library. Magnetic cards are not included. The Program Description I page gives a basic description of the program. The Program Description II page provides a sample problem and the keystrokes used to solve it. The User Instructions page contains a description of the keystrokes used to solve problems in general and the options which are available to the user. The Program Listing I and Program Listing II pages list the program steps necessary to operate the calculator. The comments, listed next to the steps, describe the reason for a step or group of steps. Other pertinent information about data register contents, uses of labels and flags and the initial calculator status mode is also found on these pages. Following the directions in your HP-67 or HP-97 **Owners' Handbook and Programming Guide,** "Loading a Program" (page 134, HP-67; page 119, HP-97), key in the program from the Program Listing I and Program Listing II pages. A number at the top of the Program Listing indicates on which calculator the program was written (HP-67 or HP-97). If the calculator indicated differs from the calculator you will be using, consult Appendix E of your **Owner's Handbook** for the corresponding keycodes and keystrokes converting HP-67 to HP-97 keycodes and vice versa. No program conversion is necessary. The HP-67 and HP-97 are totally compatible, but some differences do occur in the keycodes used to represent some of the functions.

A program loaded into the HP-67 or HP-97 is not permanent—once the calculator is turned off, the program will not be retained. You can, however, permanently save any program by recording it on a blank magnetic card, several of which were provided in the Standard Pac that was shipped with your calculator. Consult your **Owner's Handbook** for full instructions. A few points to remember:

> The Set Status section indicates the status of flags, angular mode, and display setting. After keying in your program, review the status section and set the conditions as indicated before using or permanently recording the program.
>
> REMEMBER! To save the program permanently, **clip** the corners of the magnetic card once you have recorded the program. This simple step will protect the magnetic card and keep the program from being inadvertently erased.

As a part of HP's continuing effort to provide value to our customers, we hope you will enjoy our newest concept.

TABLE OF CONTENTS

SINE PLATE SOLUTIONS 1
Coordinates of a point, position and slope of an inclined hole. This program, with the aid of commonly available dowel pins, measuring tools, (in the case of the sine plate, obviously a sine plate and height blocks), will aid in accurately finding angles, including holes and coordinates of points.

V NOTCHES AND LONG RADII 8
This program, together with commonly available dowel pins and height gages, will accurately determine the position and angles of "V" grooves or notches. With the same tools, long radii are accurately measured.

INTERNAL AND EXTERNAL TAPERS 14
This program, used with commonly available dowel pins, height bases, and balls, will accurately determine the position and angle of both external and internal tapers.

POINTS OF TANGENCY WITH CIRCLES AND ARCS 20
These programs will accurately locate points of tangency between straight lines and arcs, between straight lines and a circle, and between two circles and a straight line.

LINE-LINE INTERSECTION/GRID POINTS 26
This card will calculate the point of intersection of two lines and the Cartesian coordinates of points in other systems.

POINTS ON A STRAIGHT LINE 33
This program calculates the coordinates of equidistant points on a straight line.

GRID OF POINTS: CALCULATES ALL POINTS 37
This program calculates the X and Y coordinates, all the points of a grid.

GRID OF POINTS: CALCULATE DISCRETE POINTS 42
This program complements "Grid of Points: Calculate all Points". It allows the calculation of specified points of grid.

TANGENT CIRCLE TO TWO STRAIGHT LINES WITH A GIVEN RADIUS 46
This problem calculates the X and Y coordinates of the center of a circle with a given radius. This circle being tangent to two given straight lines. In the more general case, there are four center solutions to this problem.

DISTANCE BETWEEN LINES IN SPACE 52
Given two lines, each defined by any two points, program calculates shortest distance between the two lines. (This program was written to determine the clearance between electrical distribution circuits and guy wires or supporting structures.)

Program Description I

Program Title Sine Plate Solutions,
Coordinate of a Point, Position and Slope of an Inclined Hole

Contributor's Name David Stedman
Address 15950 Oakridge Road
City Morgan Hill **State** California **Zip Code** 97330

Program Description, Equations, Variables

This program, with the aid of commonly available dowel pins, measuring tools, (in the case of the sine plate, obviously a sine plate and height blocks), will aid in accurately finding angles, including holes and coordinates of points.

Operating Limits and Warnings

All angular output is in decimal degrees. Use the H.MS conversions on the calculator to convert back and forth between degrees, minutes and seconds and decimal degrees.

This program has been verified only with respect to the numerical example given in *Program Description II*. User accepts and uses this program material AT HIS OWN RISK, in reliance solely upon his own inspection of the program material and without reliance upon any representation or description concerning the program material.

NEITHER HP NOR THE CONTRIBUTOR MAKES ANY EXPRESS OR IMPLIED WARRANTY OF ANY KIND WITH REGARD TO THIS PROGRAM MATERIAL, INCLUDING, BUT NOT LIMITED TO, THE IMPLIED WARRANTIES OF MERCHANTABILITY AND FITNESS FOR A PARTICULAR PURPOSE. NEITHER HP NOR THE CONTRIBUTOR SHALL BE LIABLE FOR INCIDENTAL OR CONSEQUENTIAL DAMAGES IN CONNECTION WITH OR ARISING OUT OF THE FURNISHING, USE OR PERFORMANCE OF THIS PROGRAM MATERIAL.

Program Description II

Sketch(es) Solution for Finding Coordinates of a Point

Given: a, b, d and e, determine x and y

$$c^2 = d^2 + e^2$$

$$\cos \alpha = \frac{b^2 + c^2 - a^2}{2bc}$$

$$\tan \theta = \frac{e}{d}$$

$$x = b \cos (\alpha + \theta)$$
$$y = b \sin (\alpha + \theta)$$

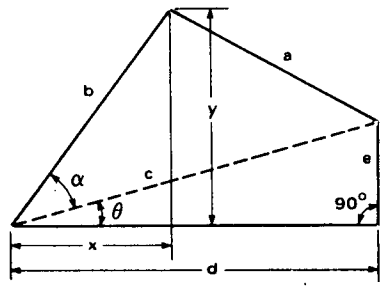

Sample Problem(s) Given a = 1.290" d = 2.000"
b = 1.470" e = .568"

Solution(s) Keystrokes

1.29 [↑] 1.47 [↑] 2. [↑] .568 [A]

▷ x = *** ,8679", Y = *** 1.186"

Reference(s)

Program Description II

Sketch(es)

Solution for Finding the Location and Angle of an Inclined Hole

Given: a, b, r_1 and d_2, determine θ and x

$$\sin\theta = \frac{2r_1 + d_2}{a_1 - b_1}$$

$$x = \frac{1}{2}(a_1 + b_1) + r_1 \cot\theta$$

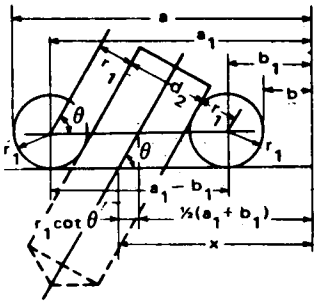

Sample Problem(s)

Given a = 1.630" r_1 = .200"

b = .260" d_2 = .4375"

Solution(s)

Keystrokes

1.63 [↑] .26 [↑] .2 [↑] .4375 [A]

C ; ***Θ = *** 59.7007, x = *** 1.0619"

Reference(s)

Program Description II

Sketch(es)

Given: e and K, determine α

$\sin \alpha = \frac{e}{k}$

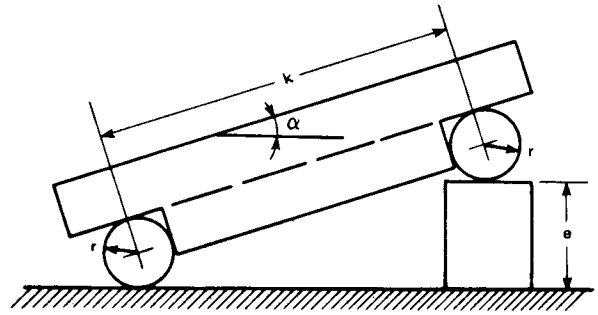

Interchangeable Solutions for Work with a Sine Bar

Sample Problem(s)

Sample #1

Given: Sine Bar Length [K] = 5."
Gage Blocks Height [e] = 1.7101

Find angle α

Solution(s)

Keystrokes 5[↑] 1.7101[f] [D]
[D]; α = 20.0000°

OR

Sample #2

Given: Sine Bar Length [K] = 10"
Angle [α] = 32.12°
Find Necessary Gage Block Height

Keystrokes 10[↑] 32.12 [f][E]
[E]; e = 5.3169"

Sample #3

Given: Sine Bar Length [K] = 5"
Angle [α] = 21° 12' 41"
Find Necessary Gage Block Height

Keystrokes 5[↑] 21.1241[f] [H←] [f] [E]
[E]; e = 1.8090"

User Instructions

Solution to Geometric Problems, Part 1 / 2

Start	Point Coordinate	loc & ang hole	sine bar k↑e↑∝→	sine bar k↑∝↑e→

STEP	INSTRUCTIONS	INPUT DATA/UNITS	KEYS		OUTPUT DATA/UNITS
1	Load side 1 and side 2.				
2	Solve for coordinates of a point	a	↑		
		b	↑		
		d	↑		
		e	A		
			B		x
					y
3	Solve for location angle of an inclined hole.				
		a	↑		
		b	↑		
		r_1	↑		
		d_2	A		
			C		θ
					x
4	Solve heights and angles with a sine bar				
4a	[Find angles]	k	↑		
		e	f	D	∝
4b	[Find height of blocks]	k	↑		
		∝	f	E	e

97 Program Listing I

STEP	KEY ENTRY	KEY CODE	COMMENTS
001	*LBLA	21 11	Initialize for either coordinates of a point or an inclined hole.
002	CLRG	16-53	
003	STO4	35 04	
004	R↓	-31	
005	STO3	35 03	
006	R↓	-31	
007	STO2	35 02	
008	R↓	-31	
009	STO1	35 01	
010	RTN	24	
011	*LBLB	21 12	Find the coordinates of a point.
012	RCL4	36 04	
013	X²	53	
014	RCL3	36 03	
015	X²	53	
016	+	-55	
017	STO5	35 05	
018	RCL2	36 02	
019	X²	53	
020	+	-55	
021	RCL1	36 01	
022	X²	53	
023	-	-45	
024	RCL5	36 05	
025	√X	54	
026	RCL2	36 02	
027	x	-35	
028	2	02	
029	x	-35	
030	÷	-24	
031	COS⁻¹	16 42	
032	STO6	35 06	
033	RCL4	36 04	
034	RCL3	36 03	
035	÷	-24	
036	TAN⁻¹	16 43	
037	STO7	35 07	
038	RCL6	36 06	
039	+	-55	
040	STO8	35 08	
041	COS	42	
042	RCL2	36 02	
043	x	-35	
044	SPC	16-11	
045	PRTX	-14	"x"
046	RCL8	36 08	
047	SIN	41	
048	RCL2	36 02	
049	x	-35	
050	PRTX	-14	"y"
051	SPC	16-11	
052	RTN	24	
053	*LBLC	21 13	
054	RCL3	36 03	
055	2	02	
056	x	-35	
057	RCL4	36 04	
058	+	-55	
059	RCL1	36 01	
060	RCL3	36 03	
061	-	-45	
062	STO5	35 05	
063	RCL2	36 02	
064	RCL3	36 03	
065	+	-55	
066	STO6	35 06	
067	-	-45	
068	÷	-24	
069	SIN⁻¹	16 41	
070	STO7	35 07	
071	SPC	16-11	
072	PRTX	-14	"θ"
073	RCL7	36 07	
074	TAN	43	
075	1/X	52	
076	RCL3	36 03	
077	x	-35	
078	RCL5	36 05	
079	RCL6	36 06	
080	+	-55	
081	2	02	
082	÷	-24	
083	+	-55	
084	PRTX	-14	
085	SPC	16-11	"x"
086	RTN	24	
087	*LBLd	21 16 14	Initialize sine bar (find alpha).
088	CLRG	16-53	
089	STO2	35 02	
090	R↓	-31	
091	STO1	35 01	
092	RTN	24	
093	*LBLD	21 14	
094	RCL2	36 02	Find ∝.
095	RCL1	36 01	
096	÷	-24	
097	SIN⁻¹	16 41	
098	SPC	16-11	
099	PRTX	-14	
100	SPC	16-11	
101	RTN	24	
102	*LBLe	21 16 15	Initialize sine bar (find height).
103	CLRG	16-53	
104	STO2	35 02	
105	R↓	-31	
106	STO1	35 01	
107	RTN	24	
108	*LBLE	21 15	Find base block height.
109	RCL2	36 02	
110	SIN	41	
111	RCL1	36 01	
112	x	-35	

REGISTERS

0	1	2	3	4	5	6	7	8	9
	Used	Used	Used	Used	Used	Used	Used	Used	
S0	S1	S2	S3	S4	S5	S6	S7	S8	S9

A	B	C	D	E	I

97 Program Listing II

STEP	KEY ENTRY	KEY CODE	COMMENTS
113	SPC	16-11	
114	PRTX	-14	
115	SPC	16-11	
116	RTN	24	
120			
130			
140			
150			
160			
170			
180			
190			
200			
210			
220			

LABELS					FLAGS
A Start	B Pt. Coord.	C 1 & C hl	D Sine bar	E Sine bar	0
a	b	c	d Initialize	e Initialize	1
0	1	2	3	4	2
5	6	7	8	9	3

SET STATUS

FLAGS	ON	OFF	TRIG		DISP	
0	☐	☑	DEG	☑	FIX	☑
1	☐	☑	GRAD	☐	SCI	☐
2	☐	☑	RAD	☐	ENG	☐
3	☐	☑			n	4

Program Description I

Program Title V Notches and Long Radii

Contributor's Name David Stedman
Address 15950 Oakridge Road
City Morgan Hill **State** California **Zip Code** 95037

Program Description, Equations, Variables

This program, together with commonly available dowel pins and height gages, will accurately determine the position and angles of "V" grooves or notches. With the same tools, long radii are acurately measured.

Operating Limits and Warnings

All angular output is in decimal degrees. Use the H.MS conversion on the calculatror to convert back and forth between degrees, minutes and seconds and decimal degrees.

This program has been verified only with respect to the numerical example given in *Program Description II*. User accepts and uses this program material AT HIS OWN RISK, in reliance solely upon his own inspection of the program material and without reliance upon any representation or description concerning the program material.

NEITHER HP NOR THE CONTRIBUTOR MAKES ANY EXPRESS OR IMPLIED WARRANTY OF ANY KIND WITH REGARD TO THIS PROGRAM MATERIAL, INCLUDING, BUT NOT LIMITED TO, THE IMPLIED WARRANTIES OF MERCHANTABILITY AND FITNESS FOR A PARTICULAR PURPOSE. NEITHER HP NOR THE CONTRIBUTOR SHALL BE LIABLE FOR INCIDENTAL OR CONSEQUENTIAL DAMAGES IN CONNECTION WITH OR ARISING OUT OF THE FURNISHING, USE OR PERFORMANCE OF THIS PROGRAM MATERIAL.

Program Description II

Sketch(es)

Given: a, b, c, d, r_1 and r_2,

determine x, y, α and β

$$\tan \phi = \frac{b_1 - a_1}{d_1 - c_1}$$

$$\overline{0_1 0_2} = \frac{d_1 - c_1}{\cos \phi}$$

$$\sin \theta = \frac{r_2 - r_1}{\overline{0_1 0_2}}$$

$$\overline{00_1} = \frac{r_1}{\sin \theta}$$

$$x = a_1 - \overline{00_1} \sin \phi$$

$$y = c_1 - \overline{00_1} \cos \phi$$

$$\alpha = 90° + \phi - \theta$$
$$\beta = 90° - \phi - \theta$$

Special case for $\phi = 0$, then:

$$\alpha = \beta$$

$$\overline{0_1 0_2} = d_1 - c_1$$

$$\sin \theta = \frac{r_2 - r_1}{d_1 - c_1}$$

$$y = c_1 - \frac{r_1}{\sin \theta}$$

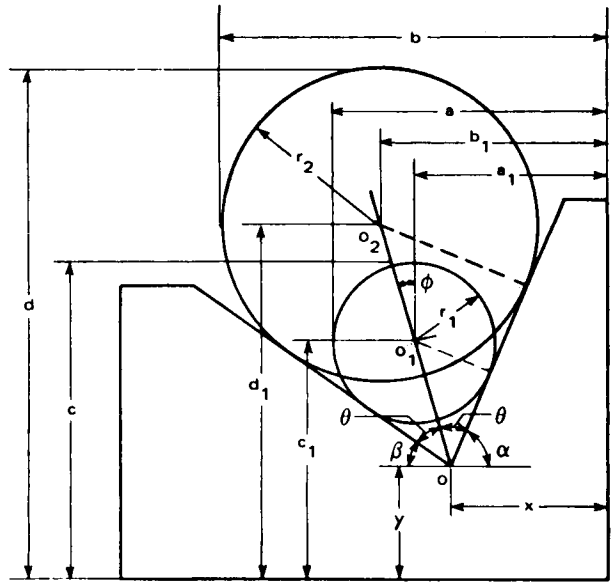

Solution for "V" Notch

Sample #1 Given: a = 1.500" d = 2.800"
b = 2.125" r_1= .4375"
c = 1.750" r_2= .875"

Keystrokes 1.5[↑], 2.125[↑], 1.75[↑], 2.8[A], .4375[↑], .875[f] [A]

[B]; x = .875"; Y=.700"; a = 63.942°; β = 29.901°

Sample #2 [where ϕ= zero] a = 1.500" d = 2.900"
b = 1.900" r_1= .500"
c = 1.800" r_2= .900"

Keystrokes 1.5[↑], 1.9[↑], 1.8[↑] 2.9[A] .5[↑] .9[f] [A]

[B]; 1111111111, x = 1.000"; y = .425"; a = β = 55.150°

Program Description II

Sketch(es)

Given: L, r and h, determine R

$$(R + r)^2 = (R + h - r)^2 + \left(\frac{1}{2}L\right)^2$$

$$R = \frac{L^2}{8(2r - h)} - \frac{h}{2}$$

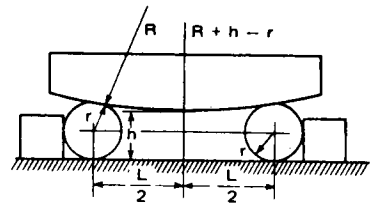

Solution for Long Radii, Convex Arcs

Sample #1 Given: L = 1.000"
r = .15625"
h = .270"

Keystrokes
1.[↑] .15625[↑] .27[C] [D]; R = 2.8062"

Given: L, r and h_1, determine R

$$(R - r)^2 = (R - h_1 + r)^2 + \left(\frac{1}{2}L\right)^2$$

$$R = \frac{L^2}{8(h_1 - 2r)} + \frac{h_1}{2}$$

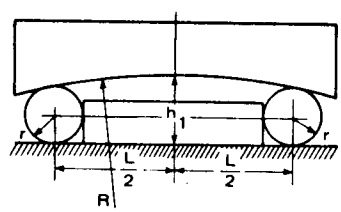

Solution for Long Radii, Concave Arcs

Sample #2 Given: L = 1.300"
r = .15625"
h = .378"

Keystrokes
1.3[↑] .15625[↑] .378[C] [E]; R = 3.4142"

Reference(s)

User Instructions

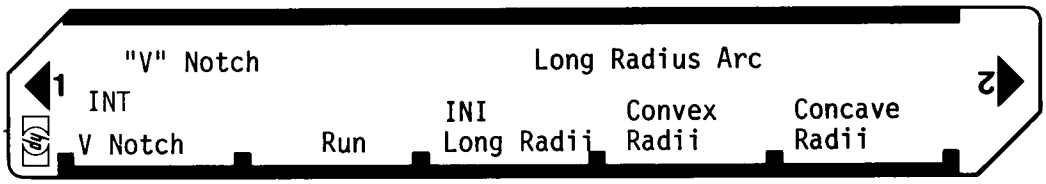

STEP	INSTRUCTIONS	INPUT DATA/UNITS	KEYS		OUTPUT DATA/UNITS
1	Load side 1 and side 2 of the card.				
	SOLVE FOR "V" NOTCH				
2	Initialize the calculator	a	↑		
		b	↑		
		c	↑		
		d	A		
		r_1	↑		
		r_2	f	A	
			B		x
					y
					a
					β
	Note - If the calculators first response is				xxxxxxxxxx
	all ones, the problem is a special case				1111111111
	case where $\phi = 0$ and a and β are equal.				x
					y
					a
	SOLVE LONG RADII				
1	Initialize the calculator	L	↑		
		r	↑		
		h or h_1	C		
	If convex radius		D		R
	If concave radius		E		R

97 Program Listing I

STEP	KEY ENTRY	KEY CODE	COMMENTS
001	*LBLA	21 11	Initialize V notch.
002	STO4	35 04	
003	R↓	-31	
004	STO3	35 03	
005	R↓	-31	
006	STO2	35 02	
007	R↓	-31	
008	STO1	35 01	
009	R↓	-31	
010	RTN	24	
011	*LBLa	21 16 11	
012	STO6	35 06	
013	R↓	-31	
014	STO5	35 05	
015	RTN	24	
016	*LBLB	21 12	
017	RCL3	36 03	
018	RCL5	36 05	V notch solution.
019	-	-45	
020	STO3	35 03	
021	RCL1	36 01	
022	RCL5	36 05	
023	-	-45	
024	STO1	35 01	
025	RCL2	36 02	
026	RCL6	36 06	
027	-	-45	
028	STO2	35 02	
029	RCL4	36 04	
030	RCL6	36 06	
031	-	-45	
032	STO4	35 04	
033	RCL2	36 02	
034	RCL1	36 01	
035	-	-45	
036	RCL4	36 04	
037	RCL3	36 03	
038	-	-45	
039	STO8	35 08	
040	÷	-24	
041	TAN⁻¹	16 43	
042	X=0?	16-43	
043	GTO1	22 01	
044	STO7	35 07	
045	COS	42	
046	RCL8	36 08	
047	X⇄Y	-41	
048	÷	-24	
049	STO8	35 08	
050	RCL6	36 06	
051	RCL5	36 05	
052	-	-45	
053	X⇄Y	-41	
054	÷	-24	
055	STO2	35 02	
056	RCL5	36 05	
057	X⇄Y	-41	
058	÷	-24	
059	STO4	35 04	
060	RCL1	36 01	
061	RCL7	36 07	
062	SIN	41	
063	RCL4	36 04	
064	x	-35	
065	-	-45	
066	SPC	16-11	
067	PRTX	-14	
068	RCL3	36 03	
069	RCL7	36 07	
070	COS	42	
071	RCL4	36 04	
072	x	-35	
073	-	-45	
074	PRTX	-14	
075	9	09	
076	0	00	
077	RCL7	36 07	
078	+	-55	
079	RCL2	36 02	
080	SIN⁻¹	16 41	
081	STO2	35 02	
082	-	-45	
083	PRTX	-14	
084	9	09	
085	0	00	
086	RCL7	36 07	
087	-	-45	
088	RCL2	36 02	
089	-	-45	
090	PRTX	-14	
091	RTN	24	
092	*LBL1	21 01	a = β special case.
093	SPC	16-11	
094	1	01	
095	1	01	
096	1	01	
097	1	01	
098	1	01	
099	1	01	
100	1	01	
101	1	01	
102	1	01	
103	1	01	
104	PRTX	-14	
105	RCL1	36 01	
106	PRTX	-14	
107	RCL6	36 06	
108	RCL5	36 05	
109	-	-45	
110	RCL8	36 08	
111	÷	-24	
112	STO0	35 00	

REGISTERS

0	1	2	3	4	5	6	7	8	9
Used	Used	Used	Used	Used	Used	Used	Used	Used	
S0	S1	S2	S3	S4	S5	S6	S7	S8	S9

A	B	C	D	E	I

97 Program Listing II

STEP	KEY ENTRY	KEY CODE	COMMENTS
113	RCL5	36 05	
114	X⇄Y	-41	
115	÷	-24	
116	RCL3	36 03	
117	X⇄Y	-41	
118	-	-45	
119	PRTX	-14	
120	9	09	
121	0	00	
122	RCL0	36 00	
123	SIN⁻¹	16 41	
124	-	-45	
125	PRTX	-14	
126	SPC	16-11	
127	RTN	24	
128	*LBLC	21 13	Initialize long radii arc.
129	STO3	35 03	
130	R↓	-31	
131	STO2	35 02	
132	R↓	-31	
133	STO1	35 01	
134	RTN	24	
135	*LBLD	21 14	Convex long radii solution.
136	RCL1	36 01	
137	X²	53	
138	RCL2	36 02	
139	2	02	
140	×	-35	
141	RCL3	36 03	
142	-	-45	
143	8	08	
144	×	-35	
145	÷	-24	
146	RCL3	36 03	
147	2	02	
148	÷	-24	
149	-	-45	
150	SPC	16-11	
151	PRTX	-14	
152	SPC	16-11	
153	RTN	24	
154	*LBLE	21 15	Concave long radii solution.
155	RCL1	36 01	
156	X²	53	
157	RCL3	36 03	
158	RCL2	36 02	
159	2	02	
160	×	-35	
161	-	-45	
162	8	08	
163	×	-35	
164	÷	-24	
165	RCL3	36 03	
166	2	02	
167	÷	-24	
168	+	-55	
169	SPC	16-11	
170	PRTX	-14	
171	SPC	16-11	
172	RTN	24	

LABELS					FLAGS
A Ini V notch	B Solve	C Long Radii	D Convex	E Concave	0
a	b	c	d	e	1
0	1 $\phi = 0$	2	3	4	2
5	6	7	8	9	3

SET STATUS

FLAGS	ON	OFF	TRIG		DISP	
0	☐	☑	DEG	☑	FIX	☑
1	☐	☑	GRAD	☐	SCI	☐
2	☐	☑	RAD	☐	ENG	☐
3	☐	☑			n 3	

Program Description I

Program Title Internal and External Tapers

Contributor's Name David Stedman
Address 15950 Oakridge Road
City Morgan Hill **State** California **Zip Code** 95037

Program Description, Equations, Variables

This program, used with commonly available dowel pins, height bases, and balls, will accurately determine the position and angle of both external and internal tapers.

Operating Limits and Warnings

All angular output is in decimal degrees which can be converted to degrees, minutes and seconds wtih the →H.MS function.

This program has been verified only with respect to the numerical example given in *Program Description II*. User accepts and uses this program material AT HIS OWN RISK, in reliance solely upon his own inspection of the program material and without reliance upon any representation or description concerning the program material.

NEITHER HP NOR THE CONTRIBUTOR MAKES ANY EXPRESS OR IMPLIED WARRANTY OF ANY KIND WITH REGARD TO THIS PROGRAM MATERIAL, INCLUDING, BUT NOT LIMITED TO, THE IMPLIED WARRANTIES OF MERCHANTABILITY AND FITNESS FOR A PARTICULAR PURPOSE. NEITHER HP NOR THE CONTRIBUTOR SHALL BE LIABLE FOR INCIDENTAL OR CONSEQUENTIAL DAMAGES IN CONNECTION WITH OR ARISING OUT OF THE FURNISHING, USE OR PERFORMANCE OF THIS PROGRAM MATERIAL.

Program Description II

Sketch(es)

Given: b, c, d, r_1 and r_2, determine C, D, ϕ and R_1

$$C^2 = 2c(r_1 + r_2) - c^2$$
$$D^2 = 2d(r_1 + r_2) - d^2$$
$$\tan\theta = \frac{D - C}{b}$$
$$2\theta = 90° + \phi$$
$$R_1 = C + r_1 \cot\theta$$

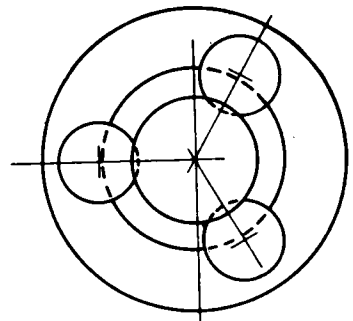

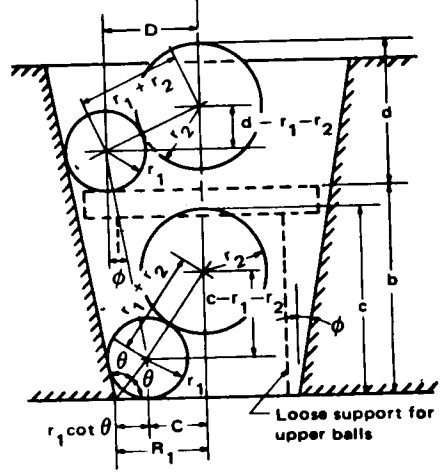

Solution for Finding Internal Taper

Sample #1 Given: b = 1.150" r_1 = .21875"
c = 1.050" r_2 = .34375"
d = .800"

Keystrokes
1.15[↑], 1.05[↑], .8[↑], .21875[A], .34375[f][A]

[B]; c = .2806", d = .5099", ϕ = 11.2753°, θ = 50.6377° R_1 = .4601"

Given: a, b, r_1 and r_2, determine x and ϕ

$$\tan\theta = \frac{r_2 - r_1}{b_1 - a_1}$$
$$\phi = 90° - 2\theta$$
$$x = a_1 - r_1 \cot\theta$$

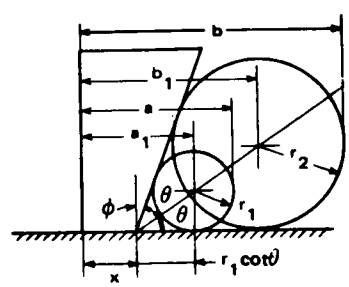

Solution for Finding External Tapers, Case #1

Sample #2 Given: a = .820" r_1 = .21875"
b =1.430" r_2 = .46875"

Keystrokes
.82[↑] 1.43[↑] .21875[↑] .46875[A]

[C]; ϕ = 20.444°, x = .28625"

Program Description II

Sketch(es)

Given: a, b, r and h, determine x and ϕ

$$\tan 2\theta = \frac{h}{b-a}$$

$$\phi = 90 - 2\theta$$
$$x = a - r - r\cot\theta$$

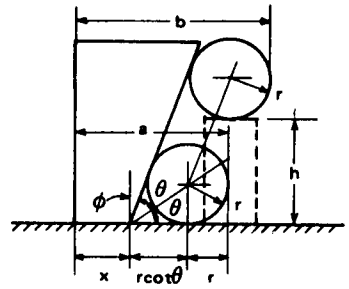

Solution for Finding External Tapers, Case #2

Sample #3 Given: a = .830" r = .21875"
b =1.070" h = .5625"

Keystrokes

.83[↑] 1.07[↑] .21875[↑] .5625[A]

D; ϕ = 23.106°, x = .28008"

Given: c, d, r_1 and r_2, determine x and ϕ

$$\sin\phi = \frac{r_2 - r_1}{d_1 - c_1}$$

$$x = \frac{r_1}{\cos\phi} - c_1\tan\phi$$

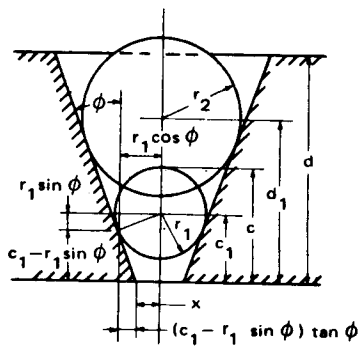

Solution for Finding External Tapers Case #3

Sample #4 Given: c = .625" r_1 = .250"
d =1.250" r_2 = .4375"

Keystrokes

.625[↑] 1.25[↑] .25[↑] .4375[A]

D; ϕ = 25.3769°, x = .09882"

User Instructions

Internal and External Tapers

1 2

Start EXT INT 1 INT 2 INT 3

STEP	INSTRUCTIONS	INPUT DATA/UNITS	KEYS		OUTPUT DATA/UNITS
1	Load side one and side two.				
2	Determine case number from drawings				
3	Internal taper	b	↑		
		c	↑		
		d	↑		
		r_1	A		
		r_2	f	a	
			B		C
					D
					ϕ
					θ
					R_1
3	External taper case 1	a	↑		
		b	↑		
		r_1	↑		
		r_2	A		
			C		ϕ
					x
3	External taper case 2	a	↑		
		b	↑		
		r	↑		
		h	A		
			D		ϕ
					x
3	External taper case 3	c	↑		
		d	↑		
		r_1	↑		
		r_2	A		
			E		ϕ
					x

97 Program Listing I

STEP	KEY ENTRY	KEY CODE	COMMENTS
001	*LBLA	21 11	Store values
002	STO4	35 04	
003	R↓	-31	
004	STO3	35 03	
005	R↓	-31	
006	STO2	35 02	
007	R↓	-31	
008	STO1	35 01	
009	RTN	24	
010	*LBLa	21 16 11	Store r_2.
011	STO5	35 05	
012	RTN	24	
013	*LBLB	21 12	Case 1, internal taper. Calculate "C"
014	RCL5	36 05	
015	RCL4	36 04	
016	+	-55	
017	STO7	35 07	
018	RCL2	36 02	
019	2	02	
020	x	-35	
021	x	-35	
022	RCL2	36 02	
023	ENT↑	-21	
024	x	-35	
025	-	-45	
026	√X	54	
027	STO6	35 06	
028	SPC	16-11	
029	PRTX	-14	
030	RCL7	36 07	Calculate "D"
031	RCL3	36 03	
032	2	02	
033	x	-35	
034	x	-35	
035	RCL3	36 03	
036	ENT↑	-21	
037	x	-35	
038	-	-45	
039	√X	54	
040	STO7	35 07	
041	PRTX	-14	
042	RCL7	36 07	Calculate ϕ
043	RCL6	36 06	
044	-	-45	
045	RCL1	36 01	
046	÷	-24	
047	TAN⁻¹	16 43	
048	STO7	35 07	
049	PRTX	-14	
050	9	09	Calculate θ
051	0	00	
052	+	-55	
053	2	02	
054	÷	-24	
055	STO8	35 08	
056	PRTX	-14	
057	TAN	43	Calculate R_1.
058	1/X	52	
059	RCL4	36 04	
060	x	-35	
061	RCL6	36 06	
062	+	-55	
063	STO9	35 09	
064	PRTX	-14	
065	SPC	16-11	
066	RTN	24	
067	*LBLC	21 13	
068	GSB1	23 01	Case 1 , external taper. Calculate ϕ
069	TAN⁻¹	16 43	
070	STO5	35 05	
071	2	02	
072	x	-35	
073	9	09	
074	0	00	
075	X⇄Y	-41	
076	-	-45	
077	SPC	16-11	
078	PRTX	-14	
079	RCL5	36 05	
080	TAN	43	Calculate x
081	1/X	52	
082	RCL3	36 03	
083	x	-35	
084	RCL7	36 07	
085	X⇄Y	-41	
086	-	-45	
087	PRTX	-14	
088	SPC	16-11	
089	RTN	24	
090	*LBLD	21 14	Case 2, external taper. Calculate ϕ
091	RCL4	36 04	
092	RCL2	36 02	
093	RCL1	36 01	
094	-	-45	
095	÷	-24	
096	TAN⁻¹	16 43	
097	STO5	35 05	
098	9	09	
099	0	00	
100	X⇄Y	-41	
101	-	-45	
102	SPC	16-11	
103	PRTX	-14	Calculate x
104	RCL1	36 01	
105	RCL3	36 03	
106	-	-45	
107	LSTX	16-63	
108	RCL5	36 05	
109	2	02	
110	÷	-24	
111	TAN	43	
112	1/X	52	

REGISTERS

0	1	2	3	4	5	6	7	8	9
	b or a	c or b	d or r_1	r_1 or r_2	r_2 or used	c / used	D,ϕ	θ or NA	R_1 or NA

S0	S1	S2	S3	S4	S5	S6	S7	S8	S9

A	B	C	D	E	I

97 Program Listing II

STEP	KEY ENTRY	KEY CODE	COMMENTS
113	x	-35	
114	-	-45	
115	PRTX	-14	
116	SPC	16-11	
117	RTN	24	----------
118	*LBLE	21 15	Case 3, external
119	GSB1	23 01	tapers.
120	SIN⁻¹	16 41	Calculate ϕ
121	STO6	35 06	
122	SPC	16-11	
123	PRTX	-14	----------
124	COS	42	Calculate x
125	RCL3	36 03	
126	X⇄Y	-41	
127	÷	-24	
128	RCL6	36 06	
129	TAN	43	
130	RCL7	36 07	
131	x	-35	
132	-	-45	
133	PRTX	-14	
134	SPC	16-11	
135	RTN	24	----------
136	*LBL1	21 01	External taper
137	RCL4	36 04	subroutine.
138	RCL3	36 03	
139	-	-45	
140	RCL2	36 02	
141	RCL4	36 04	
142	-	-45	
143	RCL1	36 01	
144	RCL3	36 03	
145	-	-45	
146	STO7	35 07	
147	-	-45	
148	÷	-24	
149	RTN	24	

LABELS					FLAGS
A Start	B Ext Taper	C Int - 1	D Int-2	E Int - 3	0
a Start	b	c	d	e	1
0	1 Ext Sub	2	3	4	2
5	6	7	8	9	3

SET STATUS

FLAGS	ON	OFF	TRIG		DISP	
0	☐	☒	DEG	☒	FIX	☐
1	☐	☒	GRAD	☐	SCI	☐
2	☐	☒	RAD	☐	ENG	☐
3	☐	☒			n ____	

Program Description I

Program Title Points of Tangency With Circles and Arcs

Contributor's Name David Stedman
Address 15950 Oakridge Road
City Morgan Hill **State** California **Zip Code** 95057

Program Description, Equations, Variables

These programs will accurately locate points of tangency between straight lines and arcs, between straight lines and a circle, and between two circles and a straight line.

Operating Limits and Warnings

All angular outputs are in decimal degrees, →H.MS may be used to convert to degrees, minutes, and seconds.

This program has been verified only with respect to the numerical example given in *Program Description II*. User accepts and uses this program material AT HIS OWN RISK, in reliance solely upon his own inspection of the program material and without reliance upon any representation or description concerning the program material.

NEITHER HP NOR THE CONTRIBUTOR MAKES ANY EXPRESS OR IMPLIED WARRANTY OF ANY KIND WITH REGARD TO THIS PROGRAM MATERIAL, INCLUDING, BUT NOT LIMITED TO, THE IMPLIED WARRANTIES OF MERCHANTABILITY AND FITNESS FOR A PARTICULAR PURPOSE. NEITHER HP NOR THE CONTRIBUTOR SHALL BE LIABLE FOR INCIDENTAL OR CONSEQUENTIAL DAMAGES IN CONNECTION WITH OR ARISING OUT OF THE FURNISHING, USE OR PERFORMANCE OF THIS PROGRAM MATERIAL.

Program Description II

Sketch(es)

Given: a and r, determine x and y

$$b^2 = (a + r)^2 - r^2$$

$$\sin\theta = \frac{r}{a+r} = \frac{y}{b} = \frac{x}{r}$$

$$x = \frac{r^2}{a+r}$$

$$y = \frac{br}{a+r}$$

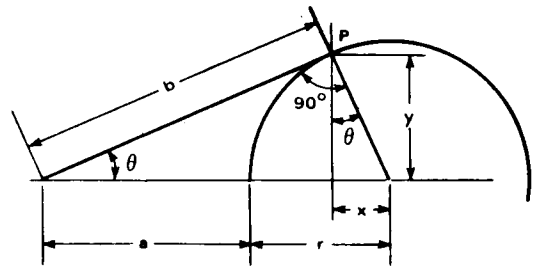

Solution for Finding Point of Tangency With an Arc Figure 1

Sample Problem(s) Sample #1 Given: a = 1.125"
r = .750"

Keystrokes 1.125[↑] .75[↑] [A]

[B]; x = .3000", y = .6874"

- Optional -

[f] [b]; b = 1.7185, θ = 23.5782°

Given: b, c and r, determine x_1 and y_1

$$a = \sqrt{b^2 + c^2} - r$$

$$\sin\theta = \frac{r}{a+r}$$

$$\tan\alpha = \frac{b}{c}$$

$$\gamma = 90° - \theta - \alpha$$

$e = r \sin\gamma$, then $x_1 = b + e$

$d = r \cos\gamma$, then $y_1 = c - d$

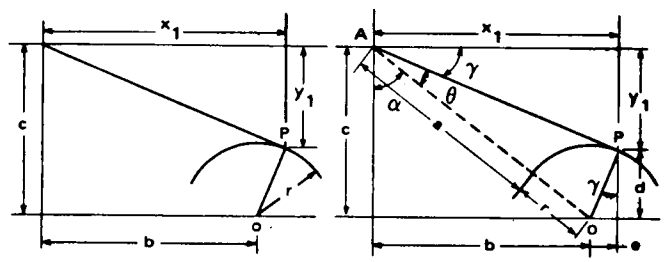

Solution for Finding Points of Tangency with A Circle

Figure 2

Sample #2 Given: b = 1.175", c = .930" r = .405"

Keystrokes 1.175[↑] .93[↑] .405[A]

[C]; x_1 = 1.3312", y_1 = .5563"

- Optional -

[f] c ; a = 1.0935", θ = 15.6803°, α = 51.6388°

Reference(s)

Program Description II

Sketch(es) **Given:** a, b, r_1 and r_2, determine x_1, y_1, x_2 and y_2

$$c = \sqrt{a^2 + b^2}$$

$$\tan \theta = \frac{b}{a}$$

$$\sin \phi = \frac{r_2 - r_1}{c}$$

$$x_1 = r_1 \sin(\theta + \phi)$$
$$y_1 = r_1 \cos(\theta + \phi)$$
$$x_2 = r_2 \sin(\theta + \phi)$$
$$y_2 = b + r_2 \cos(\theta + \phi)$$

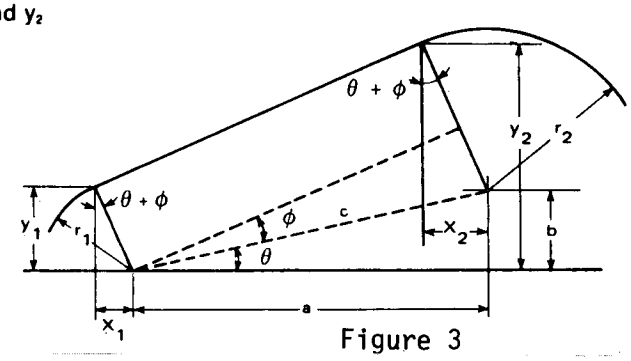

Figure 3

Sample Problem(s) Solution for Finding Points of Tangency with Two Circles

Sample #3 Given: a = 1.950" r_1 = .500"
b = .4375" r_2 = .880"

Keystrokes 1.95[↑] .4375[↑] .5[↑] .88[A]
[D]; x_1= .2002, y_1 = .4582, x_2 = .3524, y_2 = 1.2439
- Optional -
[f] [d]; c = 1.9985", θ = 12.6454°, φ = 10.9612°

Solution(s)

Reference(s)

User Instructions

Points of Tangency With Circles and Arcs

1 2

Start | Arc | Circle | 2 Circles

STEP	INSTRUCTIONS	INPUT DATA/UNITS	KEYS		OUTPUT DATA/UNITS
1	Load side 1 and side 2.				
2	Determine case type from sketches				
3a	Point of tangency with an arc - Fig 1	a	↑		
		r	A		
			B		x
	Optional		f	B	y
					b
					θ
3b	Point of tangency with a circle - Fig 2	b	↑		
		c	↑		
		r_1	A		
			C		x_1
					y_1
	Optional		f	C	a
					θ
					α
3c	Points of tangency with two circles - Fig 3	a	↑		
		b	↑		
		r_1	↑		
		r_2	A		
			D		x_1
					y_1
					x_2
					y_2
	Optional		f	D	c
					θ
					ϕ

97 Program Listing I

STEP	KEY ENTRY	KEY CODE	COMMENTS
001	*LBLA	21 11	Start by storing values.
002	CLRG	16-53	
003	STO4	35 04	
004	R↓	-31	
005	STO3	35 03	
006	R↓	-31	
007	STO2	35 02	
008	R↓	-31	
009	STO1	35 01	
010	RTN	24	
011	*LBLB	21 12	Calculate point of tangency with an arc.
012	RCL4	36 04	
013	RCL3	36 03	
014	+	-55	
015	X²	53	
016	RCL4	36 04	
017	X²	53	
018	-	-45	
019	√X	54	
020	STO5	35 05	
021	RCL4	36 04	
022	ENT↑	-21	
023	RCL3	36 03	
024	+	-55	
025	÷	-24	
026	COS⁻¹	16 42	
027	STO6	35 06	
028	RCL4	36 04	
029	X²	53	
030	LSTX	16-63	
031	RCL3	36 03	
032	+	-55	
033	÷	-24	
034	SPC	16-11	
035	PRTX	-14	"x"
036	RCL5	36 05	
037	RCL4	36 04	
038	x	-35	
039	LSTX	16-63	
040	RCL3	36 03	
041	+	-55	
042	÷	-24	
043	PRTX	-14	"y"
044	SPC	16-11	
045	RTN	24	
046	*LBLb	21 16 12	Optional output of b and θ˜
047	RCL5	36 05	
048	PRTX	-14	
049	RCL6	36 06	
050	PRTX	-14	
051	SPC	16-11	
052	RTN	24	
053	*LBLC	21 13	Calculate point of tangency with a
054	RCL2	36 02	
055	X²	53	
056	RCL3	36 03	
057	X²	53	Circle.
058	+	-55	
059	√X	54	
060	RCL4	36 04	
061	-	-45	
062	STO5	35 05	
063	RCL4	36 04	
064	ENT↑	-21	
065	ENT↑	-21	
066	RCL5	36 05	
067	+	-55	
068	÷	-24	
069	SIN⁻¹	16 41	
070	STO6	35 06	
071	RCL2	36 02	
072	RCL3	36 03	
073	÷	-24	
074	TAN⁻¹	16 43	
075	STO7	35 07	
076	9	09	
077	0	00	
078	RCL6	36 06	
079	-	-45	
080	RCL7	36 07	
081	-	-45	
082	STO8	35 08	
083	SIN	41	
084	RCL4	36 04	
085	x	-35	
086	RCL2	36 02	
087	+	-55	
088	SPC	16-11	
089	PRTX	-14	"x"
090	RCL8	36 08	
091	COS	42	
092	RCL4	36 04	
093	x	-35	
094	RCL3	36 03	
095	X⇄Y	-41	
096	-	-45	
097	PRTX	-14	"y"
098	RTN	24	
099	*LBLc	21 16 13	Optional output of a, θ, and α.
100	RCL5	36 05	
101	PRTX	-14	
102	RCL6	36 06	
103	PRTX	-14	
104	RCL7	36 07	
105	PRTX	-14	
106	RTN	24	
107	*LBLD	21 14	Calculate point of tangency with two circles.
108	RCL1	36 01	
109	RCL2	36 02	
110	→P	34	
111	STO5	35 05	
112	RCL2	36 02	

REGISTERS

0	1	2	3	4	5	6	7	8	9
0	Input	Input	Input	Input	Used	Used	Used	Used	0
S0	S1	S2	S3	S4	S5	S6	S7	S8	S9

A	B	C	D	E	I
0	0	0	0	0	0

97 Program Listing II

STEP	KEY ENTRY	KEY CODE	COMMENTS
113	RCL1	36 01	
114	÷	-24	
115	TAN⁻¹	16 43	
116	STO6	35 06	
117	RCL4	36 04	
118	RCL3	36 03	
119	-	-45	
120	RCL5	36 05	
121	÷	-24	
122	SIN⁻¹	16 41	
123	STO7	35 07	
124	+	-55	
125	STO8	35 08	
126	SIN	41	
127	RCL3	36 03	
128	x	-35	
129	SPC	16-11	
130	PRTX	-14	
131	RCL8	36 08	
132	COS	42	
133	RCL3	36 03	
134	x	-35	
135	PRTX	-14	
136	RCL8	36 08	
137	SIN	41	
138	RCL4	36 04	
139	x	-35	
140	PRTX	-14	
141	RCL8	36 08	
142	COS	42	
143	RCL4	36 04	
144	x	-35	
145	RCL2	36 02	
146	+	-55	
147	PRTX	-14	
148	SPC	16-11	
149	RTN	24	----------
150	*LBLd	21 16 14	Optional output of
151	SPC	16-11	c,θ, and ϕ.
152	RCL5	36 05	
153	PRTX	-14	
154	RCL6	36 06	
155	PRTX	-14	
156	RCL7	36 07	
157	PRTX	-14	
158	SPC	16-11	
159	RTN	24	----------
160			

STEP	KEY ENTRY	KEY CODE	COMMENTS
170			
180			
190			
200			
210			
220			

LABELS					FLAGS
A Start	B Arc	C Circle	D 2 Circle	E	0
a	b Opt.	c Opt.	d Opt.	e	1
0	1	2	3	4	2
5	6	7	8	9	3

SET STATUS

FLAGS	ON	OFF	TRIG		DISP	
0	☐	☒	DEG	☒	FIX	☒
1	☐	☒	GRAD	☐	SCI	☐
2	☐	☒	RAD	☐	ENG	☐
3	☐	☒			n	4

Program Description I

Program Title Line-Line Intersection/Grid Points

Contributor's Name David Stedman
Address 15950 Oakridge Road
City Morgan Hill **State** Ca. **Zip Code** 95037

Program Description, Equations, Variables

This card will calculate the point of intersection of two lines and the Cartesian coordinates of points in other systems.

See page two for equations and sketch.

Operating Limits and Warnings

This program has been verified only with respect to the numerical example given in *Program Description II*. User accepts and uses this program material AT HIS OWN RISK, in reliance solely upon his own inspection of the program material and without reliance upon any representation or description concerning the program material.

NEITHER HP NOR THE CONTRIBUTOR MAKES ANY EXPRESS OR IMPLIED WARRANTY OF ANY KIND WITH REGARD TO THIS PROGRAM MATERIAL, INCLUDING, BUT NOT LIMITED TO, THE IMPLIED WARRANTIES OF MERCHANTABILITY AND FITNESS FOR A PARTICULAR PURPOSE. NEITHER HP NOR THE CONTRIBUTOR SHALL BE LIABLE FOR INCIDENTAL OR CONSEQUENTIAL DAMAGES IN CONNECTION WITH OR ARISING OUT OF THE FURNISHING, USE OR PERFORMANCE OF THIS PROGRAM MATERIAL.

Program Description II

EQUATIONS For both programs, the user specifies the angle from horizontal to lines in the problem. Slope will be converted to angle by the relation $\theta = \tan^{-1}$ (slope). Given two points (x_1, y_1) and (x_2, y_2) on the line, the angle is

$$\theta = \tan^{-1}\left(\frac{y_2 - y_1}{x_2 - x_1}\right)$$

Line–Line Intersection

(x, y) = Coordinates of point of intersection

(x_1, y_1) = Coordinates of point on line one

(x_2, y_2) = Coordinates of point on line two

θ_1 = Angle from horizontal to line one

θ_2 = Angle from horizontal to line two

Grid Points

(x_0, y_0) = Coordinates of 0, 0 grid point

h_1, h_2 = Grid system unit vectors

θ_1 = Angle to h_1 unit vector

θ_2 = Angle to h_2 unit vector

(x_{ij}, y_{ij}) = Coordinates of i, j grid point

Equations:

Line–Line Intersection

$$x = \frac{x_1 \tan\theta_1 - x_2 \tan\theta_2 + y_2 - y_1}{\tan\theta_1 - \tan\theta_2}$$

$$y = y_1 + (x - x_1)\tan\theta_1$$

Grid Points

$$x_{ij} = x_0 + j\Delta x_1 + i\Delta x_2$$

$$y_{ij} = y_0 + j\Delta y_1 + i\Delta y_2$$

$$\Delta x_1 = h_1 \cos\theta_1$$

$$\Delta y_1 = h_1 \sin\theta_1$$

$$\Delta x_2 = h_2 \cos\theta_2$$

$$\Delta y_2 = h_2 \sin\theta_2$$

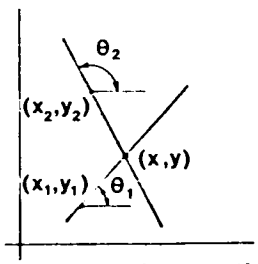

Line-Line Intersection

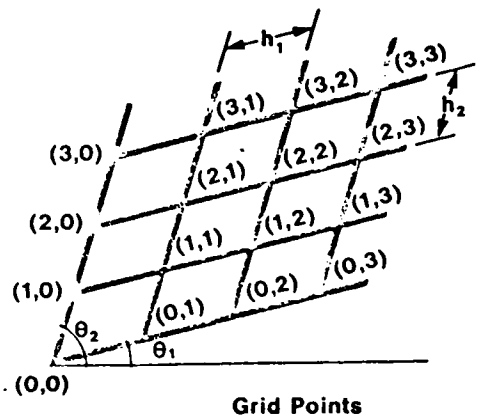

Grid Points

Program Description II

Sketch(es)

Sample Problem(s)

Example 1. Find the point of intersection of two lines passing through (10,20) (40,30) and (-10,30) (50,10).

10↑20↑40↑30 f A 10 CHS ↑30↑50↑10 f B → 15.00 , 21.67

Example 2. Find the intersection of a line through (0,0) with slope 2.8 and the line with equation x = 4.5.

4.5↑0↑0↑2.8 f E → 12.60

Example 3. For a grid with its origin at (1,1) and vectors 2 and 3 units long at 30 and 90 degrees, respectively, find the cartesian coordinates for the following grid coordiantes: (0,0), (1,0), (2,0), (0,1), (0,2), (1,1), (1.5,3).

```
1↑1↑2↑3 C 30↑90 D 0↑0 E → 1.00 , 1.00
1↑0 E                   → 1.00 , 4.00
2↑0 E                   → 1.00 , 7.00
0↑1 E                   → 2.73 , 2.00
0↑2 E                   → 4.46 , 3.00
1↑1 E                   → 2.73 , 5.00
1.5↑3 E                 → 6.20 , 8.50
```

Reference(s)

User Instructions

LINE-LINE INTERSECTION / GRID POINTS

1 $x_1 \uparrow y_1 \uparrow x_1' \uparrow y_1'$ $x_2 \uparrow y_2 \uparrow x_2' \uparrow y_2'$ $x_1 \uparrow y_1 \uparrow slp$ $x_2 \uparrow y_2 \uparrow slp$ $[x \uparrow] x_1 \uparrow y_1 \uparrow slp$ 2

$x \uparrow x_1 \uparrow y \uparrow \theta_1$ $x_2 \uparrow y_2 \uparrow \theta_2$ $x_0 \uparrow y_0 \uparrow h_1 \uparrow h_2$ $\theta_1 \uparrow \theta_2$ $i \uparrow j \rightarrow x_{ij}, y_{ij}$

STEP	INSTRUCTIONS	INPUT DATA/UNITS	KEYS		OUTPUT DATA/UNITS
1	Load side 1 and side 2.				
*	For line-line intersection [no vertical lines]				
2a	Input coordinates of point on line one and				
	angle from horizontal to line	x_1	↑		
		y_1	↑		
		θ_1	A		
	or				
2b	Input coordinates at two points on line	x_1	↑		
		y_1	↑		
		x_1'	↑		
		y_1'	f	A	
	or				
2c	Input coordinates of point on line and slope	x_1	↑		
		y_1	↑		
		$slope_1$	f	C	
3a	Input coordinates of point on line two and				
	angle from horizontal to the line and				
	calculate coordinates of point of intersection	x_2	↑		
		y_2	↑		
		θ_2	B		x,y
	or				
3b	Input coordinates at two points on line 2	x_2	↑		
		y_2	↑		
		x_2'	↑		
		y_2'	f	B	x,y
3c	Input coordinates of point on line two and				
	slope	x_2	↑		
		y_2	↑		
		$slope_2$	f	D	x,y
*	For line-line intersection [one vertical line]				
4a	Input x coordinate of vertical line,	x	↑		
	coordinates of point on line one	x_1	↑		
		y_1	↑		
	and angle from horizontal to line	θ_1	A		y
	or				
4b	Input x coordinates of vertical line,	x	↑		
	coordinates of point on line one and	x_1	↑		
		y_1	↑		
	slope of line	slope	f	E	y

User Instructions

STEP	INSTRUCTIONS	INPUT DATA/UNITS	KEYS	OUTPUT DATA/UNITS
*	For grid points			
5a	Input origin coordinates and grid system unit			
	vectors	x_0	↑	
		y_0	↑	
		h_1	↑	
		h_2	C	
5b	Input the angles from horizontal to unit	θ_1	↑	
	vectors	θ_2	D	Δy
5c	Input the grid coordinates of the point and	i	↑	
	calculate the x,y coordinates	j	E	$**x_{ii}$
				$**y_{ii}$
	For additional points on the grid,			
	repeat step 5c.			
	For a new case go to step 2a, or 4a,			
	or 5a.			

97 Program Listing I

STEP	KEY ENTRY	KEY CODE	COMMENTS
001	*LBLa	21 16 11	
002	P⇄S	16-51	
003	CLRG	16-53	
004	STO4	35 04	
005	R↓	-31	
006	STO3	35 03	
007	R↓	-31	
008	STO2	35 02	
009	R↓	-31	
010	STO1	35 01	
011	RCL4	36 04	
012	RCL2	36 02	
013	-	-45	
014	RCL3	36 03	
015	RCL1	36 01	
016	-	-45	
017	÷	-24	
018	TAN⁻¹	16 43	
019	STO5	35 05	
020	RCL1	36 01	
021	RCL2	36 02	
022	RCL5	36 05	
023	P⇄S	16-51	
024	*LBLA	21 11	
025	TAN	43	
026	STO3	35 03	
027	R↓	-31	
028	STO2	35 02	
029	R↓	-31	
030	STO1	35 01	
031	-	-45	
032	×	-35	
033	+	-55	
034	R/S	51	
035	*LBLb	21 16 12	
036	P⇄S	16-51	
037	CLRG	16-53	
038	STO4	35 04	
039	R↓	-31	
040	STO3	35 03	
041	R↓	-31	
042	STO2	35 02	
043	R↓	-31	
044	STO1	35 01	
045	RCL4	36 04	
046	RCL2	36 02	
047	-	-45	
048	RCL3	36 03	
049	RCL1	36 01	
050	-	-45	
051	÷	-24	
052	TAN⁻¹	16 43	
053	STO5	35 05	
054	RCL1	36 01	
055	RCL2	36 02	
056	RCL5	36 05	
057	P⇄S	16-51	
058	*LBLB	21 12	
059	TAN	43	
060	STO4	35 04	
061	X⇄Y	-41	
062	R↓	-31	
063	×	-35	
064	R↑	16-31	
065	-	-45	
066	RCL2	36 02	
067	+	-55	
068	RCL1	36 01	
069	RCL3	36 03	
070	×	-35	
071	-	-45	
072	RCL4	36 04	
073	RCL3	36 03	
074	-	-45	
075	÷	-24	
076	STO4	35 04	
077	PRTX	-14	
078	RCL4	36 04	
079	RCL1	36 01	
080	-	-45	
081	RCL3	36 03	
082	×	-35	
083	RCL2	36 02	
084	+	-55	
085	R/S	51	
086	*LBLC	21 13	
087	STO8	35 08	
088	R↓	-31	
089	STO7	35 07	
090	R↓	-31	
091	STO4	35 04	
092	R↓	-31	
093	STO1	35 01	
094	R/S	51	
095	*LBLD	21 14	
096	1	01	
097	→R	44	
098	RCL8	36 08	
099	×	-35	
100	STO3	35 03	
101	R↓	-31	
102	RCL8	36 08	
103	×	-35	
104	STO6	35 06	
105	R↓	-31	
106	1	01	
107	→R	44	
108	RCL7	36 07	
109	×	-35	
110	STO2	35 02	
111	R↓	-31	
112	RCL7	36 07	

REGISTERS

0	1 x_1, x_0	2 y_1, Δx_1	3 $\tan\theta_1$, Δx_2	4 $\tan\theta_2$, y_0	5 Δy_1	6 Δy_2	7 h_1	8 h_2	9 Used
S0	S1 Used	S2 Used	S3 Used	S4 Used	S5 Used	S6	S7	S8	S9

A	B	C	D	E	I

97 Program Listing II

STEP	KEY ENTRY	KEY CODE	COMMENTS
113	×	-35	
114	STO5	35 05	
115	R/S	51	
116	*LBLE	21 15	
117	STO8	35 08	
118	RCL2	36 02	
119	×	-35	
120	RCL1	36 01	
121	+	-55	
122	X⇄Y	-41	
123	STO7	35 07	
124	RCL3	36 03	
125	×	-35	
126	+	-55	
127	PRTX	-14	
128	RCL8	36 08	
129	RCL5	36 05	
130	×	-35	
131	RCL4	36 04	
132	+	-55	
133	RCL7	36 07	
134	RCL6	36 06	
135	×	-35	
136	+	-55	
137	RTN	24	
138	*LBLc	21 16 13	
139	P⇄S	16-51	
140	CLRG	16-53	
141	STO3	35 03	
142	R↓	-31	
143	STO2	35 02	
144	R↓	-31	
145	STO1	35 01	
146	RCL3	36 03	
147	TAN⁻¹	16 43	
148	STO4	35 04	
149	RCL1	36 01	
150	RCL2	36 02	
151	RCL4	36 04	
152	P⇄S	16-51	
153	F2?	16 23 02	
154	GTOB	22 12	
155	GTOA	22 11	
156	RTN	24	
157	*LBLd	21 16 14	
158	SF2	16 21 02	
159	GTOc	22 16 13	
160	RTN	24	
161	*LBLe	21 16 15	
162	P⇄S	16-51	
163	CLRG	16-53	
164	STO4	35 04	
165	R↓	-31	
166	STO3	35 03	
167	R↓	-31	
168	STO2	35 02	
169	R↓	-31	
170	STO1	35 01	
171	RCL4	36 04	
172	TAN⁻¹	16 43	
173	STO5	35 05	
174	RCL1	36 01	
175	RCL2	36 02	
176	RCL3	36 03	
177	RCL5	36 05	
178	P⇄S	16-51	
179	GTOA	22 11	
180	RTN	24	

LABELS					FLAGS
A $(x\uparrow)x_1\uparrow y_1\uparrow\theta_1$	B $x_2\uparrow y_2\uparrow\theta_2$	C $x_0\uparrow y_0\uparrow h_1\uparrow h_2$	D $\theta_1\uparrow\theta_2$	E $i\ j\ x_{ij}\uparrow y_{ij}$	0
a $x_1\uparrow y_1\uparrow x_1'\uparrow y_1'$	b $x_2\uparrow y_2\uparrow x_2'\uparrow y_2'$	c $x_1\uparrow y_1\uparrow slp_1$	d $x_2\uparrow y_2\uparrow slp_2$	e $(x\uparrow)x_1\uparrow y_1\uparrow slp$	1
0	1	2	3	4	2 Used
5	6	7	8	9	3

SET STATUS				
FLAGS	ON	OFF	TRIG	DISP
0	☐	☒	DEG ☒	FIX ☒
1	☐	☒	GRAD ☐	SCI ☐
2	☐	☒	RAD ☐	ENG ☐
3	☐	☒		n 2

Program Description I

Program Title Points on a Straight Line

Contributor's Name DAVID STEDMAN
Address 15950 OAKRIDGE ROAD
City MORGAN HILL, **State** CALIFORNIA **Zip Code** 95037

Program Description, Equations, Variables THIS PROGRAM CALCULATES THE COORDINATES OF EQUDISTANT POINTS ON A STRAIGHT LINE.

DATA:

- THE STARTING POINT [CALLED 1]
  $P_1 = [X_1, Y_1]$
- THE ANGLE OF THE STRAIGHT LINE WITH THE POSITIVE X AXIS: θ_1
- THE DISTANCE BETWEEN TWO CONSECUTIVE POINTS IN THE DIRECTION OF THE STRAIGHT LINE: H
- THE NUMBER OF POINTS N, FOR AUTOMATIC CALCULATION [THE POINT 1 BEING INCLUDED].

POINT P_i IS CALCULATED BY: $X_i = x_1 + (i-1)\ H \cos \theta_1$
$Y_i = Y_1 + (i-1)\ H \sin \theta_1$

THE AUTO OPTION IS PROVIDED FOR OUTPUT OF THE ORDERED PAIRS $[X_n, Y_n]$ THROUGH PRINT COMMANDS. IF AUTO IS NOT SELECTED, THE VALUES WILL BE OUTPUT ONE AT A TIME BY THE USE OF R/S.

RESULTS: AT YOUR OPTION:

- AUTOMATICALLY INCREMENT i [i=1,2,...n] FOR X_i AND Y_i COORDINATES.
- CALCULATE COORDINATES X_i AND Y_i OF ONE POINT i.

NOTE: BECAUSE POINTS CAN BE REQUESTED INDIVIDUALLY IT IS POSSIBLE TO CALCULATE POINTS SUCH AS P_{-1}, P_0, and P_{-3} etc...CHAINING OF ORDERED PAIRS IS AUTOMATIC AFTER RESULT $[X_1, Y_1]$, Y_1 HAVING BEEN DISPLAYED.

This program has been verified only with respect to the numerical example given in *Program Description II*. User accepts and uses this program material AT HIS OWN RISK, in reliance solely upon his own inspection of the program material and without reliance upon any representation or description concerning the program material.

NEITHER HP NOR THE CONTRIBUTOR MAKES ANY EXPRESS OR IMPLIED WARRANTY OF ANY KIND WITH REGARD TO THIS PROGRAM MATERIAL, INCLUDING, BUT NOT LIMITED TO, THE IMPLIED WARRANTIES OF MERCHANTABILITY AND FITNESS FOR A PARTICULAR PURPOSE. NEITHER HP NOR THE CONTRIBUTOR SHALL BE LIABLE FOR INCIDENTAL OR CONSEQUENTIAL DAMAGES IN CONNECTION WITH OR ARISING OUT OF THE FURNISHING, USE OR PERFORMANCE OF THIS PROGRAM MATERIAL.

Program Description II

EXAMPLE: STRAIGHT LINE DESIGNATED BY:

$P_1(X_1 = 10, Y_1 = 10, \theta_1 = -30^\circ, H = 20)$

- AUTOMATIC CALCULATION OF 6 POINTS $(N = 6)$

i	1	2	3	4	5	6
X_i	10.0000	27.3205	44.6410	61.9615	79.2820	96.6025
Y_i	10.0000	0.0000	-10.0000	-20.0000	-30.0000	-40.0000

- POINT i AT REQUEST:

P_0 $(i = 0)$, $X = -7.321$, $Y = 20.000$

P_{-1} $(i = -1)$ $X = -24.641$, $Y = 30.000$ ETC...

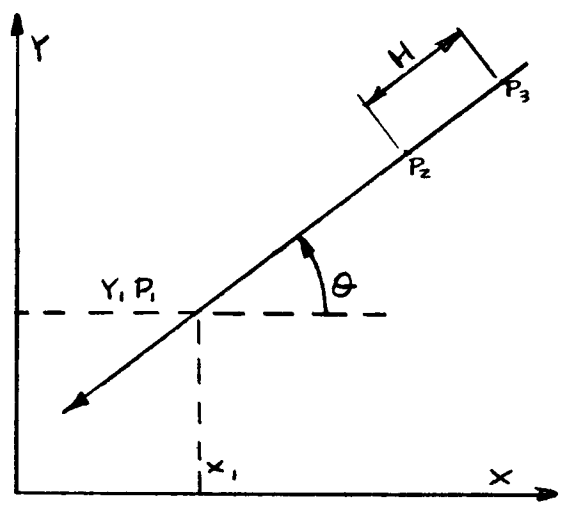


```
10 (↑) 10 (↑) 30 (CHS) (A) 20 (↑) 6 (B) (C)----------→1.0000
                                                      10.0000
                                                      10.0000
                                                      etc.
```

Reference(s)

User Instructions

POINTS ON A STRAIGHT LINE

1 2

X_1, Y_1, θ_1 | H, N | $P_1 \rightarrow Pn$ | i - Pi | AUTO?

STEP	INSTRUCTIONS	INPUT DATA/UNITS	KEYS		OUTPUT DATA/UNITS
1	ENTER THE PROGRAM				
2	ENTER POINT 1	X_1	↑		
		Y_1	↑		
	ENTER THE ANGLE OF THE LINE	θ_1	A		1.0000
3	ENTER THE DISTANCE BETWEEN EACH POINT	H	↑		
	ENTER THE NUMBER OF POINTS	N	B		
4	- MANUAL MODE -				
	CALCULATE ALL THE POINTS		C		1.0000
	i = 1...N.		R/S		X_1
			R/S		Y_1
5	DO 5-6-7 UNTIL DISPLAY FLASHES		R/S		i
6			R/S		X_i
7			R/S		Y_i
			R/S		FLASH
8	CALCULATE POINT i	i	D		X_i
			R/S		Y_i
9	-AUTO MODE-		E		1.0000
10	CALCULATE ALL THE POINTS		C		1.0000
	i = 1...N.				X_1
					Y_1
					X_i
					Y_i
	CALCULATOR WILL FLASH ZEROS WHEN PROBLEM				FLASH
	IS COMPLETE				
11	CALCULATE POINT i	i	D		X_i
					Y_i
	CALCULATOR WILL FLASH ZEROS WHEN				FLASH
	FINISHED				
12	FOR A NEW CASE, RESET DISPLAY		DSP	4	.XXXX
	GO TO 2				

LABELS					FLAGS
A X_1, Y_1, θ_1	B H, N	C $P_1 \rightarrow Pn$	D i-Pi	E AUTO	0
a	b	c	d	e	1 AUTO
0	1	2	3	4	2
5	6	7	8	9	3

SET STATUS		
FLAGS (ON OFF)	TRIG	DISP
0 ☐ ☒	DEG ☒	FIX ☒
1 ☐ ☒	GRAD ☐	SCI ☐
2 ☐ ☒	RAD ☐	ENG ☐
3 ☐ ☒		n 4

97 Program Listing I

STEP	KEY ENTRY	KEY CODE	COMMENTS
001	*LBLA	21 11	
002	COS	42	
003	STO6	35 06	
004	LSTX	16-63	
005	SIN	41	
006	STO7	35 07	
007	R↓	-31	
008	R↓	-31	
009	STO2	35 02	
010	R↓	-31	
011	STO1	35 01	
012	1	01	
013	RTN	24	
014	*LBLB	21 12	
015	STOI	35 46	
016	R↓	-31	
017	ENT↑	-21	
018	ENT↑	-21	
019	RCL6	36 06	
020	x	-35	
021	STO6	35 06	
022	R↓	-31	
023	RCL7	36 07	
024	x	-35	
025	STO7	35 07	
026	2	02	
027	RTN	24	
028	*LBLC	21 13	
029	RCL1	36 01	
030	STO4	35 04	
031	RCL2	36 02	
032	STO5	35 05	
033	1	01	
034	*LBL0	21 00	
035	F1?	16 23 01	
036	GTO2	22 02	
037	R/S	51	
038	RCL4	36 04	
039	R/S	51	
040	RCL5	36 05	
041	R/S	51	
042	*LBL3	21 03	
043	RCL7	36 07	
044	+	-55	
045	STO5	35 05	
046	R↓	-31	
047	RCL6	36 06	
048	+	-55	
049	STO4	35 04	
050	R↓	-31	
051	1	01	
052	+	-55	
053	DSZI	16 25 46	
054	GTO0	22 00	
055	GTOa	22 16 11	
056	*LBLD	21 14	
057	1	01	
058	-	-45	
059	STO3	35 03	
060	RCL6	36 06	
061	x	-35	
062	RCL1	36 01	
063	+	-55	
064	STO4	35 04	
065	F1?	16 23 01	
066	GTO4	22 04	
067	*LBL5	21 05	
068	RCL3	36 03	
069	RCL7	36 07	
070	x	-35	
071	RCL2	36 02	
072	+	-55	
073	STO5	35 05	
074	RTN	24	
075	*LBL2	21 02	
076	PRTX	-14	
077	RCL4	36 04	
078	PRTX	-14	
079	RCL5	36 05	
080	PRTX	-14	
081	GTO3	22 03	
082	*LBL4	21 04	
083	PRTX	-14	
084	GTO5	22 05	
085	*LBLE	21 15	
086	F1?	16 23 01	
087	GTO1	22 01	
088	SF1	16 21 01	
089	1	01	
090	RTN	24	
091	*LBL1	21 01	
092	CF1	16 22 01	
093	0	00	
094	RTN	24	
095	*LBLa	21 16 11	
096	DSP9	-63 09	
097	0	00	
098	0	00	
099	0	00	
100	0	00	
101	0	00	
102	0	00	
103	0	00	
104	0	00	
105	0	00	
106	PSE	16 51	
107	GTOa	22 16 11	
108	RTN	24	
110			

REGISTERS

0	1	2	3	4	5	6	7	8	9
	X_1	Y_1	i-1	X	Y	ΔX	ΔY		
S0	S1	S2	S3	S4	S5	S6	S7	S8	S9

A	B	C	D	E	I
					N, i

Program Description I

Program Title Grid of Points: Calculates all points

Contributor's Name DAVID STEDMAN
Address 15950 OAKRIDGE ROAD
City MORGAN HILL, **State** CALIFORNIA **Zip Code** 95037

Program Description, Equations, Variables THIS PROGRAM CALCULATES THE X AND Y COORDINATES, ALL THE POINTS OF A GRID DEFINED AS FOLLOWS:

DATA: a) FIRST DIRECTION OF A GRID:

- ANGLE θ, WITH THE POSITIVE X AXIS
- ALGEBRAIC DISTANCE BETWEEN EACH POINT H, IN THIS DIRECTION.
- TOTAL NUMBER N, OF POINTS (INCLUDING THE FIRST ONE)

b) SECOND DIRECTION OF THE GRID:

- ANGLE θ_2 WITH THE POSITIVE X AXIS.
- ALGEBRAIC DISTANCE BETWEEN TWO POINTS H_2 IN THAT DIRECTION.
- TOTAL NUMBER N_2 OF POINTS (INCLUDING THE FIRST ONE)

c) STARTING POINT (NOTED 1) WITH COORDINATES X AND Y.

THE CALCULATION IS INCREMENTAL FROM POINT 1 TO POINT (N_1N_2) FOR EACH POINT WE FIND:

- THE INDEX i, THE X_i and Y_i COORDINATES

AUTOMATIC STOP (THE END) IS INDICATED BY A FLASHING DISPLAY OF ZEROS.

Operating Limits and Warnings

This program has been verified only with respect to the numerical example given in *Program Description II*. User accepts and uses this program material AT HIS OWN RISK, in reliance solely upon his own inspection of the program material and without reliance upon any representation or description concerning the program material.

NEITHER HP NOR THE CONTRIBUTOR MAKES ANY EXPRESS OR IMPLIED WARRANTY OF ANY KIND WITH REGARD TO THIS PROGRAM MATERIAL, INCLUDING, BUT NOT LIMITED TO, THE IMPLIED WARRANTIES OF MERCHANTABILITY AND FITNESS FOR A PARTICULAR PURPOSE. NEITHER HP NOR THE CONTRIBUTOR SHALL BE LIABLE FOR INCIDENTAL OR CONSEQUENTIAL DAMAGES IN CONNECTION WITH OR ARISING OUT OF THE FURNISHING, USE OR PERFORMANCE OF THIS PROGRAM MATERIAL.

Program Description II

Sketch(es)

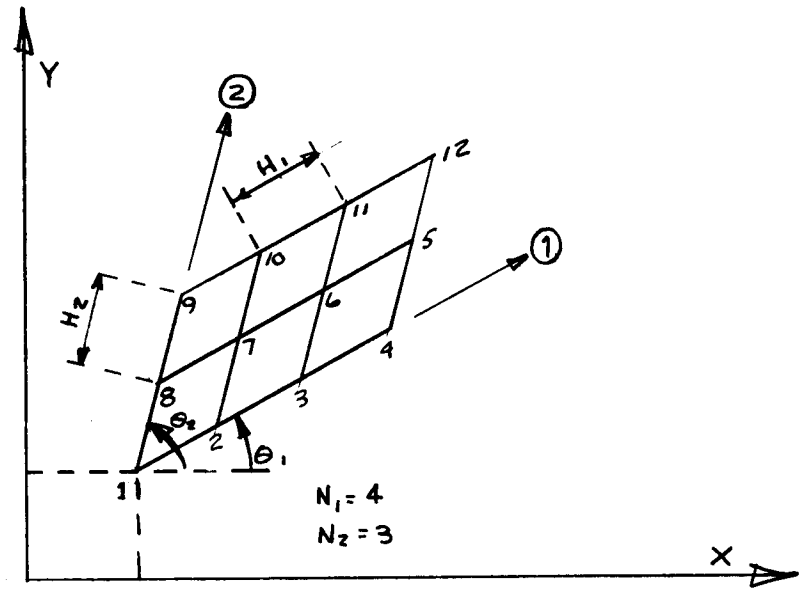

Sample Problem(s)

$\theta_1 = 0°$, $H_1 = 10$, $N_1 = 3$ $\quad \begin{bmatrix} X_1 = 10 \\ Y_1 = 10 \end{bmatrix}$

$\theta_2 = 90°$, $H_2 = 20$, $N_2 = 2$

i	1	2	3	4	5	6
X_i	10.0000	20.0000	30.0000	30.0000	20.0000	10.0000
Y_i	10.0000	10.0000	10.0000	30.0000	30.0000	30.0000

Solution(s

0 (↑) 10 (A) 90 (↑) 20 (B) 3 (↑) 2 (C) 10 (↑) 10 (D) (f) (A) (E)⟶ 1.0000
10.0000
10.0000
etc.

Reference(s)

User Instructions

GRID OF POINTS: CALCULATE ALL POINTS
AUTO?

1 2

θ_1, H_1 | θ_2, H_2 | N_1, N_2 | X_1, Y_1 | $P_1 \rightarrow Pn$

STEP	INSTRUCTIONS	INPUT DATA/UNITS	KEYS		OUTPUT DATA/UNITS
1	ENTER BOTH SIDES OF CARD				
2	INPUT FIRST DIRECTION	θ_1	↑		
		H_1	A		1.0000
3	INPUT SECOND DIRECTION	θ_2	↑		
		H_2	B		2.0000
4	INPUT NUMBER OF POINTS	N_1	↑		
		N_2	C		3.0000
5	INPUT ORIGIN (POINT #1)	X_1	↑		
		Y_1	D		4.0000
6	- MANUAL MODE -		E		1.0000
7	START COMPUTATION		R/S		X_1
			R/S		Y_1
			R/S		i
			R/S		X_i
			R/S		Y_i
	CALCULATOR WILL FLASH ZEROS WHEN PROBLEM		R/S		Flash Zeros
	IS COMPLETE				
8	- AUTO MODE -		f	a	1.0000
	START COMPUTATION		E		1.0000
					X_1
					Y_1
					i
					X_i
					Y_i
	CALCULATOR WILL FLASH ZEROS WHEN PROBLEM				Flash Zeros
	IS COMPLETE				
9	FOR A NEW CASE, RETURN TO SETP 2				

97 Program Listing I

001	*LBLA	21	11
002	DSP4	-63	04
003	SF1	16 21	01
004	GSBe	23 16	15
005	STO1	35	01
006	R↓	-31	
007	STO2	35	02
008	1	01	
009	RTN	24	
010	*LBLB	21	12
011	DSP4	-63	04
012	GSBe	23 16	15
013	STO3	35	03
014	R↓	-31	
015	STO4	35	04
016	2	02	
017	RTN	24	
018	*LBLC	21	13
019	DSP4	-63	04
020	STOI	35	46
021	R↓	-31	
022	1	01	
023	-	-45	
024	STO5	35	05
025	STO7	35	07
026	1	01	
027	STO6	35	06
028	3	03	
029	RTN	24	
030	*LBLD	21	14
031	DSP4	-63	04
032	4	04	
033	RTN	24	
034	*LBLe	21 16	15
035	X⇄Y	-41	
036	COS	42	
037	LSTX	16-63	
038	SIN	41	
039	ENT↑	-21	
040	R↑	16-31	
041	x	-35	
042	LSTX	16-63	
043	R↑	16-31	
044	x	-35	
045	RTN	24	
046	*LBLE	21	15
047	DSP4	-63	04
048	SPC	16-11	
049	RCL6	36	06
050	GSB6	23	06
051	R↑	16-31	
052	GSB6	23	06
053	R↑	16-31	
054	GSB6	23	06
055	X⇄Y	-41	
056	R↑	16-31	

COMMENTS

057	R↑	16-31	
058	*LBL2	21	02
059	F1?	16 23	01
060	GTO1	22	01
061	*LBL3	21	03
062	GSBb	23 16	12
063	RCL1	36	01
064	-	-45	
065	GSB6	23	06
066	X⇄Y	-41	
067	RCL2	36	02
068	-	-45	
069	GSB6	23	06
070	RCL7	36	07
071	1	01	
072	-	-45	
073	STO7	35	07
074	0	00	
075	X≠Y?	16-32	
076	GTO3	22	03
077	SF1	16 21	01
078	R↓	-31	
079	RCL5	36	05
080	STO7	35	07
081	*LBL4	21	04
082	DSZI	16 25	46
083	GTO5	22	05
084	0	00	
085	GTO8	22	08
086	*LBL5	21	05
087	GSBb	23 16	12
088	RCL3	36	03
089	+	-55	
090	GSB6	23	06
091	X⇄Y	-41	
092	RCL4	36	04
093	+	-55	
094	GSB6	23	06
095	ENT↑	-21	
096	ENT↑	-21	
097	GTO2	22	02
098	*LBL1	21	01
099	GSBb	23 16	12
100	RCL1	36	01
101	+	-55	
102	GSB6	23	06
103	X⇄Y	-41	
104	RCL2	36	02
105	+	-55	
106	GSB6	23	06
107	RCL7	36	07
108	1	01	
109	-	-45	
110	STO7	35	07
111	0	00	
112	X≠Y?	16-32	

COMMENTS

REGISTERS

0	1	2	3	4	5	6	7	8	9
	ΔX_1	ΔY_1	ΔX_2	ΔY_2	N_1-1	i	N1-1	N_2	
S0	S1	S2	S3	S4	S5	S6	S7	S8	S9

A	B	C	D	E	I
					DSZ

97 Program Listing II

STEP	KEY ENTRY	KEY CODE	COMMENTS
113	GTO1	22 01	
114	CF1	16 22 01	
115	R↓	-31	
116	RCL5	36 05	
117	STO7	35 07	
118	GTO4	22 04	
119	*LBL6	21 16 12	
120	R↓	-31	
121	R↓	-31	
122	X⇄Y	-41	
123	RCL6	36 06	
124	1	01	
125	+	-55	
126	STO6	35 06	
127	GSB6	23 06	
128	R↓	-31	
129	RTN	24	
130	*LBLa	21 16 11	
131	F0?	16 23 00	
132	GTO7	22 07	
133	SF0	16 21 00	
134	CLX	-51	
135	1	01	
136	RTN	24	
137	*LBL7	21 07	
138	CF0	16 22 00	
139	CLX	-51	
140	0	00	
141	RTN	24	
142	*LBL6	21 06	
143	F0?	16 23 00	
144	PRTX	-14	
145	F0?	16 23 00	
146	RTN	24	
147	R/S	51	
148	RTN	24	
149	*LBL8	21 08	
150	DSP9	-63 09	
151	0	00	
152	0	00	
153	0	00	
154	0	00	
155	0	00	
156	0	00	
157	0	00	
158	0	00	
159	0	00	
160	PSE	16 51	
161	GTO8	22 08	
162	RTN	24	
163	R/S	51	

STEP	KEY ENTRY	KEY CODE	COMMENTS
170			
180			
190			
200			
210			
220			

LABELS

A θ_1, H_1	B θ_2, H_2	C N_1, N_2	D X_1, Y_1	E $P_1 \rightarrow Pn$
a AUTO?	b	c	d	e
0	1 X	2 X	3 X	4 X
5 X	6 PRINT/RS	7 X	8 END DISPLAY	9

FLAGS

0	AUTO TOGGLE
1	USED
2	
3	

SET STATUS

FLAGS	ON	OFF	TRIG		DISP	
0	☐	☒	DEG	☒	FIX	☒
1	☐	☒	GRAD	☐	SCI	☐
2	☐	☒	RAD	☐	ENG	☐
3	☐	☒			n 4	

Program Description I

Program Title Grid of Points: Calculate Discrete Points

Contributor's Name DAVID STEDMAN
Address 15950 OAKRIDGE ROAD
City MORGAN HILL, **State** CALIFORNIA **Zip Code** 95037

Program Description, Equations, Variables THIS PROGRAM COMPLEMENTS "SOLUTION TO GEOMETRIC PROBLEMS, PART #7,""GRID OF POINTS: CALCULATE ALL POINTS". IT ALLOWS THE CALCULATION OF SPECIFIED POINTS OF A GRID DEFINED AS FOLLOWS:

DATA:

a) FIRST DIRECTION:
- ANGLE θ, (RELATED TO POSITIVE X AXIS).
- DISTANCE BETWEEN EACH POINT H, IN THIS DIRECTION.

b) SECOND DIRECTION:
- ANGLE θ_2
- AND H_2

c) STARTING POINT (ORIGIN OF THE GRID): 11
WE GIVE X_{11} AND Y_{11}.

FORMULAS: THE FIRST DIRECTION REPRESENTS THE LINES OF THE SECOND COLUMNS.

$$Xij = X_1 + (j-1)\,\Delta X_1 + (i-1)\,\Delta X_2$$
$$Yij = Y_1 + (j-1)\,\Delta Y_1 + (i-1)\,\Delta Y_2$$

$$\Delta X_1 = H_1 \cos \theta_1$$
$$\Delta Y_1 = H_1 \sin \theta_1$$

$$\Delta X_2 = H_2 \cos \theta_2$$
$$\Delta Y_2 = H_2 \sin \theta_2$$

This program has been verified only with respect to the numerical example given in *Program Description II*. User accepts and uses this program material AT HIS OWN RISK, in reliance solely upon his own inspection of the program material and without reliance upon any representation or description concerning the program material.

NEITHER HP NOR THE CONTRIBUTOR MAKES ANY EXPRESS OR IMPLIED WARRANTY OF ANY KIND WITH REGARD TO THIS PROGRAM MATERIAL, INCLUDING, BUT NOT LIMITED TO, THE IMPLIED WARRANTIES OF MERCHANTABILITY AND FITNESS FOR A PARTICULAR PURPOSE. NEITHER HP NOR THE CONTRIBUTOR SHALL BE LIABLE FOR INCIDENTAL OR CONSEQUENTIAL DAMAGES IN CONNECTION WITH OR ARISING OUT OF THE FURNISHING, USE OR PERFORMANCE OF THIS PROGRAM MATERIAL.

Program Description II

EXAMPLE:

FIRST DIRECTION $\theta_1 = 0^\circ$, $H_1 = 10$

SECOND DIRECTION $\theta_2 = 90^\circ$, $H_2 = 20$

$X_{11} = 0$, $Y_{11} = 0$

i,j	1,1	1,2	2,1	-1,3
X_{ij}	0.0000	10.0000	0.0000	20.0000
Y_{ij}	0.0000	0.0000	20.0000	-40.0000

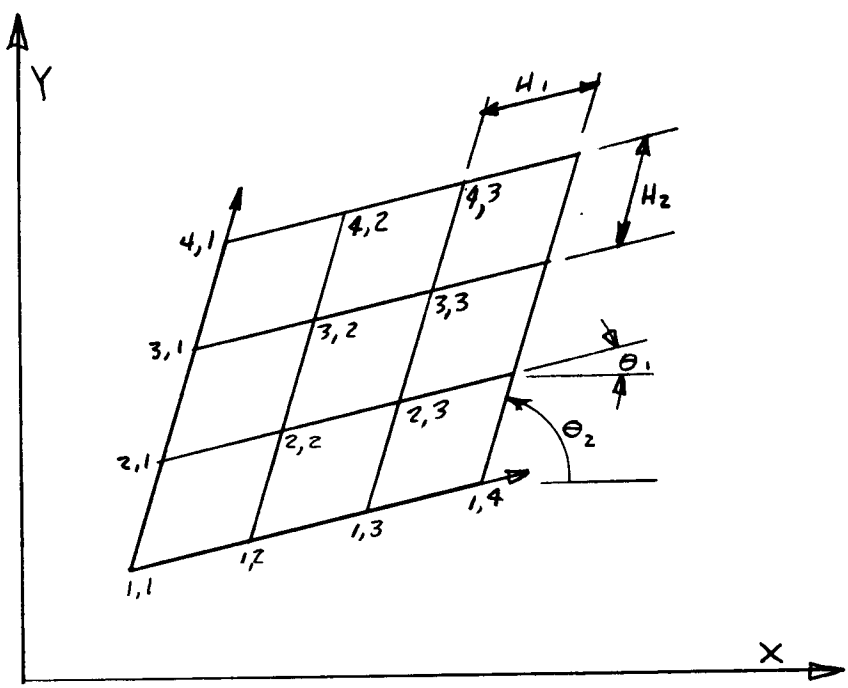


```
0 (↑) 10 (A) 90 (↑) 20 (B) 0 (↑) 0 (C) 1 (↑) 2 (D)---------→ 10.0000
R/S-----------------------------------------------------------→  0.0000
                                                                 etc.
```

Reference(s)

User Instructions

GRID OF POINTS: CALCULATE DISCRETE POINTS

1 2

θ_1, H_1 | θ_2, H_2 | X_1, Y_1 | i, j→X,Y | AUTO?

STEP	INSTRUCTIONS	INPUT DATA/UNITS	KEYS	OUTPUT DATA/UNITS
1	ENTER PROGRAM			
2	INPUT FIRST DIRECTION	θ_1	↑	
		H_1	A	1.0000
3	INPUT SECOND DIRECTION	θ_2	↑	
		H_2	B	2.0000
4	INPUT ORGIN POINT (1,1)	X_1	↑	
		Y_1	C	3.0000
5	-MANUAL MODE-			
	CALCULATE ONE POINT (i,j)	i	↑	
		j	D	Xij
	FOR A NEW POINT GO TO STEP 5		R/S	Yij
	STEPS 2,3, AND 4 ARE INDEPENDENT			
6	-AUTO MODE-		E	1.0000
7	CALCULATE ONE POINT (i,j)	i	↑	
		j	D	**Xij
				**Yij
	FOR A NEW POINT, GO TO STEP 7			
	STEPS 2, 3 AND 4 ARE INDEPENDENT			

97 Program Listing I

			COMMENTS
001	*LBLA	21 11	
002	GSBe	23 16 15	
003	STO1	35 01	
004	R↓	-31	
005	STO2	35 02	
006	1	01	
007	RTN	24	
008	*LBLB	21 12	
009	GSBe	23 16 15	
010	STO3	35 03	
011	R↓	-31	
012	STO6	35 06	
013	2	02	
014	RTN	24	
015	*LBLe	21 16 15	
016	X⇄Y	-41	
017	COS	42	
018	LSTX	16-63	
019	SIN	41	
020	ENT↑	-21	
021	R↑	16-31	
022	x	-35	
023	LSTX	16-63	
024	R↑	16-31	
025	x	-35	
026	RTN	24	
027	*LBLC	21 13	
028	STO5	35 05	
029	R↓	-31	
030	STO4	35 04	
031	3	03	
032	RTN	24	
033	*LBLD	21 14	
034	1	01	
035	-	-45	
036	STO8	35 08	
037	R↓	-31	
038	1	01	
039	-	-45	
040	STO7	35 07	
041	RCL8	36 08	
042	RCL1	36 01	
043	x	-35	
044	RCL7	36 07	
045	RCL3	36 03	
046	x	-35	
047	+	-55	
048	RCL4	36 04	
049	+	-55	
050	GSB1	23 01	
051	RCL8	36 08	
052	RCL2	36 02	
053	x	-35	
054	RCL7	36 07	
055	RCL6	36 06	
056	x	-35	

STEP	KEY ENTRY	KEY CODE	COMMENTS
057	+	-55	
058	RCL5	36 05	
059	+	-55	
060	RTN	24	
061	*LBL1	21 01	
062	F0?	16 23 00	
063	PRTX	-14	
064	F0?	16 23 00	
065	RTN	24	
066	R/S	51	
067	RTN	24	
068	*LBLE	21 15	
069	F0?	16 23 00	
070	GTO2	22 02	
071	SF0	16 21 00	
072	1	01	
073	RTN	24	
074	*LBL2	21 02	
075	CF0	16 22 00	
076	0	00	
077	RTN	24	
080			
090			
110			

LABELS

A θ_1, H_1	B θ_2, H_2	C X_1, Y_1	D i,j→X,Y	E AUTO?
a	b	c	d	e USED
0	1 USED	2 USED	3	4
5	6	7	8	9

FLAGS

0 AUTO TOGGLE
1
2
3

SET STATUS

FLAGS	ON	OFF
0	☐	☒
1	☐	☒
2	☐	☒
3	☐	☒

TRIG	
DEG	☒
GRAD	☐
RAD	☐

DISP	
FIX	☒
SCI	☐
ENG	☐
n	4

REGISTERS

0	1	2	3	4	5	6	7	8	9
	ΔX_1	ΔY_1	ΔX_2	X_{11}	Y_{11}	ΔY_2	i-1	j-1	
S0	S1	S2	S3	S4	S5	S6	S7	S8	S9

A	B	C	D	E	I

Program Description I

Program Title Tangent Circle to Two Straight Lines with a Given Radius

Contributor's Name David Stedman
Address 15950 Oakridge Road
City Morgan Hill, **State** California **Zip Code** 95037

Program Description, Equations, Variables THIS PROBLEM CALCULATES THE X AND Y COORDINATES OF THE CENTER OF A CIRCLE WITH A GIVEN RADIUS. THIS CIRCLE BEING TANGENT TO TWO GIVEN STRAIGHT LINES. IN THE MORE GENERAL CASE, THERE ARE FOUR CENTER SOLUTIONS TO THIS PROBLEM.

INPUT SUCCESSIVELY:

- THE RADIUS OF THE CIRCLE TO BE DETERMINED: Rf [A]
- EACH OF THE STRAIGHT LINES IN THE FOLLOWING MANNER:

DEFINE THE STRAIGHT LINE BY POINT AND ANGLE, THE INDICATED POSITION OF THE CIRCLE TO BE DETERMINED BY REFERENCE TO THE STRAIGHT LINE:

[B]: CIRCLE ABOVE THE STRAIGHT LINES
[C]: CIRCLE BELOW THE STRAIGHT LINES
[D]: CIRCLE TO THE LEFT OF THE STRAIGHT LINES
[E]: CIRCLE TO THE RIGHT OF THE STRAIGHT LINES

THESE MODIFIERS ALLOW THE SHIFTING OF THE TWO INITIAL STRAIGHT LINES, THE CALCULATION IS THEN THE ONE OF THE INTERSECTION OF TWO STRAIGHT LINES.

LINE 1 = $[X_1, Y_1, \theta_1]$

(X_i, Y_i) SHIFTED POINTS

LINE 2 = $[X_2, Y_2, \theta_2]$

This program has been verified only with respect to the numerical example given in *Program Description II*. User accepts and uses this program material AT HIS OWN RISK, in reliance solely upon his own inspection of the program material and without reliance upon any representation or description concerning the program material.

NEITHER HP NOR THE CONTRIBUTOR MAKES ANY EXPRESS OR IMPLIED WARRANTY OF ANY KIND WITH REGARD TO THIS PROGRAM MATERIAL, INCLUDING, BUT NOT LIMITED TO, THE IMPLIED WARRANTIES OF MERCHANTABILITY AND FITNESS FOR A PARTICULAR PURPOSE. NEITHER HP NOR THE CONTRIBUTOR SHALL BE LIABLE FOR INCIDENTAL OR CONSEQUENTIAL DAMAGES IN CONNECTION WITH OR ARISING OUT OF THE FURNISHING, USE OR PERFORMANCE OF THIS PROGRAM MATERIAL.

ALL ANGLES MUST BE INPUT FOLLOWING THESE CONVENTIONS:

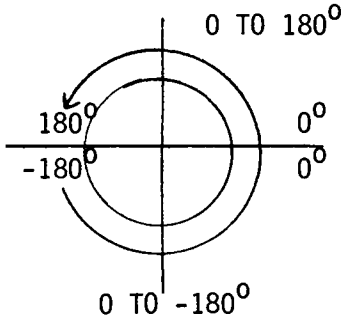

FORMULAS USED:

$$X = \frac{(Y_2 - Y_1)\cos\theta_1\cos\theta_2 + X_1 \sin\theta_1\cos\theta_2 - X_2 \sin\theta_2 \cos\theta_1}{\sin(\theta_1 - \theta_2)}$$

$$Y = Y_1 + (X - X_1)\tan\theta_1$$

$$Y = Y_2 + (X - X_2)\tan\theta_2$$

Program Description II

Sketch(es)

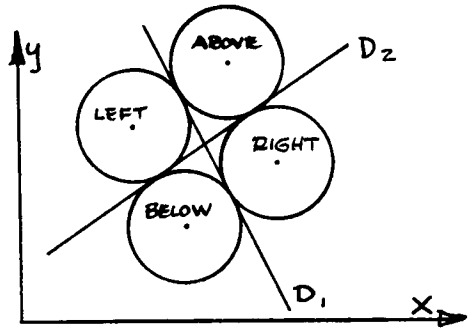

Sample Problem(s)

$D_1 = [10, 20, 30°]$ Rf = 10

$D_2 = [-20, 30, -60°]$

THE PROGRAM BEING EXECUTED FOUR TIMES WILL YIELD:

	POSITION OF CIRCLE D_1	D_2	X	Y
ABOVE	B	B	-4.5096	23.1699
BELOW	C	C	-11.8301	-4.1506
LEFT	D	D	-21.8301	13.1699
RIGHT	E	E	5.4904	5.8494

Solution(s)

~~10 (A) 10~~ (↑) 20 (↑) 30 (B) 20 (CHS) (↑) 30 (↑) 60 (CHS)

~~(B) (£)~~ (A) ----------→ -4.5096

~~(£)~~ (B) ----------→ 23.1699

Reference(s)

User Instructions

TANGENT CIRCLE TO TWO STRAIGHT LINES WITH A GIVEN RADIUS

1 f X f Y 2

Rf ABOVE BELOW LEFT RIGHT

STEP	INSTRUCTIONS	INPUT DATA/UNITS	KEYS		OUTPUT DATA/UNITS
1	ENTER BOTH SIDES OF CARD				
2	INPUT THE RADIUS; Rf	Rf	A		
3	FOR EACH STRAIGHT LINE INPUT ITS ELEMENTS	Xd	↑		
		Yd	↑		
		θd			
	POSITION THE CENTER TO BE CALCULATED BY				
	REFERENCE TO THE STRAIGHT LINE				
	- ABOVE D :		B		
	- BELOW D :		C		
	- TO THE LEFT OF D:		D		
	- TO THE RIGHT OF D:		E		
4	CALCULATE THE ABSCISSE		f	A	X
	CALCULATE THE ORDINATE		f	B	Y
	FOR A NEW CASE GO BACK TO 2				

97 Program Listing I

00527 D

STEP	KEY ENTRY	KEY CODE	COMMENTS
001	*LBLA	21 11	
002	STO8	35 08	
003	RTN	24	
004	*LBLB	21 12	
005	RCL8	36 08	
006	GTO1	22 01	
007	*LBLC	21 13	
008	RCL8	36 08	
009	CHS	-22	
010	*LBL1	21 01	
011	X⇄Y	-41	
012	F1?	16 23 01	
013	GTO2	22 02	
014	STO3	35 03	
015	X⇄Y	-41	
016	→R	44	
017	X⇄Y	-41	
018	R↓	-31	
019	+	-55	
020	STO2	35 02	
021	R↓	-31	
022	X⇄Y	-41	
023	-	-45	
024	STO1	35 01	
025	SF1	16 21 01	
026	RTN	24	
027	*LBL2	21 02	
028	STO6	35 06	
029	X⇄Y	-41	
030	→R	44	
031	X⇄Y	-41	
032	R↓	-31	
033	+	-55	
034	STO5	35 05	
035	R↓	-31	
036	X⇄Y	-41	
037	-	-45	
038	STO4	35 04	
039	CF1	16 22 01	
040	RTN	24	
041	*LBLD	21 14	
042	X<0?	16-45	
043	GTOC	22 13	
044	GTOB	22 12	
045	*LBLE	21 15	
046	X<0?	16-45	
047	GTOB	22 12	
048	GTOC	22 13	
049	RTN	24	
050	*LBLa	21 16 11	
051	RCL5	36 05	
052	RCL2	36 02	
053	-	-45	
054	RCL3	36 03	
055	COS	42	
056	STO7	35 07	
057	×	-35	
058	RCL6	36 06	
059	COS	42	
060	STO8	35 08	
061	×	-35	
062	RCL1	36 01	
063	RCL8	36 08	
064	×	-35	
065	RCL3	36 03	
066	SIN	41	
067	×	-35	
068	+	-55	
069	RCL4	36 04	
070	RCL7	36 07	
071	×	-35	
072	RCL6	36 06	
073	SIN	41	
074	×	-35	
075	-	-45	
076	RCL3	36 03	
077	RCL6	36 06	
078	-	-45	
079	SIN	41	
080	÷	-24	
081	STO7	35 07	
082	RTN	24	
083	*LBLb	21 16 12	
084	RCL3	36 03	
085	ABS	16 31	
086	9	09	
087	0	00	
088	X⇄Y	-41	
089	GTO3	22 03	
090	RCL7	36 07	
091	RCL1	36 01	
092	-	-45	
093	RCL3	36 03	
094	TAN	43	
095	×	-35	
096	RCL2	36 02	
097	GTO4	22 04	
098	*LBL3	21 03	
099	RCL7	36 07	
100	RCL4	36 04	
101	-	-45	
102	RCL6	36 06	
103	TAN	43	
104	×	-35	
105	RCL5	36 05	
106	*LBL4	21 04	
107	+	-55	
108	STO5	35 05	
109	RCL7	36 07	
110	STO4	35 04	
111	R↓	-31	
112	SPC	16-11	

REGISTERS

0	1	2	3	4	5	6	7	8	9
	X' 1	Y' 1	θ_1	X' 2	Y' 2/Y	θ_2	COS θ_1	Rf/COS θ_2	
S0	S1	S2	S3	S4	S5	S6	S7	S8	S9

A	B	C	D	E	I

97 Program Listing II

STEP	KEY ENTRY	KEY CODE	COMMENTS
113	R/S	51	
114	RTN	24	
120			
130			
140			
150			
160			
170			
180			
190			
200			
210			
220			

LABELS

A Rf	B ABOVE	C BELOW	D LEFT	E RIGHT
a X	b Y	c	d	e
0	1 USED	2 USED	3 USED	4 USED
5	6	7	8	9

FLAGS

0	
1	TOGGLE D_1 & D_2
2	
3	

SET STATUS

FLAGS	ON	OFF	TRIG		DISP	
0	☐	☒	DEG	☒	FIX	☒
1	☐	☒	GRAD	☐	SCI	☐
2	☐	☒	RAD	☐	ENG	☐
3	☐	☒			n 4	

Program Description I

Program Title DISTANCE BETWEEN LINES IN SPACE

Contributor's Name ROBERT H. MANSFIELD
Address 1411 E. MISSION
City SPOKANE State WASHINGTON Zip Code 99202

Program Description, Equations, Variables GIVEN TWO LINES, EACH DEFINED BY ANY TWO POINTS, PROGRAM CALCULATES SHORTEST DISTANCE BETWEEN THE TWO LINES. (THIS PROGRAM WAS WRITTEN TO DETERMINE THE CLEARANCE BETWEEN ELECTRICAL DISTRIBUTION CIRCUITS AND GUY WIRES OR SUPPORTING STRUCTURES.)

PROGRAM TAKES LINES DEFINED BY THE TWO-POINT FORM,

Two-point form: $$\frac{x - x_1}{x_1' - x_1} = \frac{y - y_1}{y_1' - y_1} = \frac{z - z_1}{z_1' - z_1}$$

CHANGES THEM TO THE POINT-DIRECTION FORM,

Point-direction form: $$\frac{x - x_1}{a} = \frac{y - y_1}{b} = \frac{z - z_1}{c}$$

AND THE SHORTEST DISTANCE (D) IS CALCULATED BY:

$$D = \pm \frac{\begin{vmatrix} x_2 - x_1 & y_2 - y_1 & z_2 - z_1 \\ a_1 & b_1 & c_1 \\ a_2 & b_2 & c_2 \end{vmatrix}}{\sqrt{\begin{vmatrix} b_1 & c_1 \\ b_2 & c_2 \end{vmatrix}^2 + \begin{vmatrix} c_1 & a_1 \\ c_2 & a_2 \end{vmatrix}^2 + \begin{vmatrix} a_1 & b_1 \\ a_2 & b_2 \end{vmatrix}^2}}$$

Operating Limits and Warnings

This program has been verified only with respect to the numerical example given in *Program Description II*. User accepts and uses this program material AT HIS OWN RISK, in reliance solely upon his own inspection of the program material and without reliance upon any representation or description concerning the program material.

NEITHER HP NOR THE CONTRIBUTOR MAKES ANY EXPRESS OR IMPLIED WARRANTY OF ANY KIND WITH REGARD TO THIS PROGRAM MATERIAL, INCLUDING, BUT NOT LIMITED TO, THE IMPLIED WARRANTIES OF MERCHANTABILITY AND FITNESS FOR A PARTICULAR PURPOSE. NEITHER HP NOR THE CONTRIBUTOR SHALL BE LIABLE FOR INCIDENTAL OR CONSEQUENTIAL DAMAGES IN CONNECTION WITH OR ARISING OUT OF THE FURNISHING, USE OR PERFORMANCE OF THIS PROGRAM MATERIAL.

Program Description II

Sketch(es)

Sample Problem(s) GIVEN TWO LINES IN THREE-DIMENSIONAL SPACE:
LINE #1 DEFINED BY POINTS $X_1, Y_1, Z_1 = 30, 14, 10$ AND $X_1', Y_1', Z_1' = 0, 46, 10$;
LINE #2 DEFINED BY POINTS $X_2, Y_2, Z_2 = 124, 50, -30$ AND $X_2', Y_2', Z_2' = 0, 36, 16$.

CALCULATE THE SHORTEST DISTANCE BETWEEN THE TWO LINES.

CHANGE LINE #1 BY MOVING X_1', Y_1', Z_1' TO 5, 48, 7 AND REPEAT THE DISTANCE CALCULATION.

Solution(s) KEYSTROKES:
30↑14↑10[A] 0↑46↑10[B] 124↑50↑30[CHS][C] 0↑36↑16[D][E]→2.59
(SHORTEST DISTANCE BETWEEN LINES IS 2.59 UNITS.)

CHANGE LINE #1 AND RECALCULATE DISTANCE:

5↑48↑7 [B] [E] → 3.02
(SHORTEST DISTANCE IS NOW 3.02 UNITS.)

Reference(s) HANDBOOK OF TABLES FOR MATHEMATICS, THIRD EDITION, SAMUEL M. SELBY, PUBLISHED BY THE CHEMICAL RUBBER CO. 1967, PAGE 509.

User Instructions

DISTANCE BETWEEN LINES IN SPACE

1 — 2

LINE #1		LINE #2		
$X_1 \uparrow Y_1 \uparrow Z_1$	$X_1' \uparrow Y_1' \uparrow Z_1'$	$X_2 \uparrow Y_2 \uparrow Z_2$	$X_2' \uparrow Y_2' \uparrow Z_2'$	→ DIST.

STEP	INSTRUCTIONS	INPUT DATA/UNITS	KEYS	OUTPUT DATA/UNITS
1	LOAD BOTH SIDES OF CARD			
	INPUT LINE #1:			
2	INPUT X_1, Y_1, Z_1	X_1	ENTER ↑	
		Y_1	ENTER ↑	
		Z_1	A	X_1
3	INPUT X_1', Y_1', Z_1'	X_1'	ENTER ↑	
		Y_1'	ENTER ↑	
		Z_1'	B	X_1'
	INPUT LINE #2:			
4	INPUT X_2, Y_2, Z_2	X_2	ENTER ↑	
		Y_2	ENTER ↑	
		Z_2	C	X_2
5	INPUT X_2', Y_2', Z_2'	X_2'	ENTER ↑	
		Y_2'	ENTER ↑	
		Z_2'	D	X_2'
6	CALCULATE SHORTEST DISTANCE			
	BETWEEN THE TWO LINES		E	DISTANCE*
7	FOR NEW CASE, CHANGE ONLY			
	THOSE POINTS THAT ARE			
	DIFFERENT FROM THE PREVIOUS			
	CASE BY GOING TO STEP 2, 3,			
	4, OR 5 (AS REQUIRED). THEN			
	GO TO STEP 6 TO RECALCULATE			
	NEW DISTANCE.			
	*NEGATIVE SIGN, IF PRESENT, HAS			
	NO SIGNIFICANCE			

67 Program Listing I

STEP	KEY ENTRY	KEY CODE	COMMENTS
001	*LBLA	31 25 11	
002	STO2	33 02	
003	R↓	35 53	
004	STO1	33 01	
005	R↓	35 53	
006	STO0	33 00	
007	RTN	35 22	
008	*LBLB	31 25 12	
009	STO5	33 05	
010	R↓	35 53	
011	STO4	33 04	
012	R↓	35 53	
013	STO3	33 03	
014	RTN	35 22	
015	*LBLC	31 25 13	
016	STO8	33 08	
017	R↓	35 53	
018	STO7	33 07	
019	R↓	35 53	
020	STO6	33 06	
021	RTN	35 22	
022	*LBLD	31 25 14	
023	STOB	33 12	
024	R↓	35 53	
025	STOA	33 11	
026	R↓	35 53	
027	STO9	33 09	
028	RTN	35 22	
029	*LBLE	31 25 15	
030	RCL5	34 05	
031	RCL2	34 02	
032	-	51	
033	RCL4	34 04	
034	RCL1	34 01	
035	-	51	
036	RCL3	34 03	
037	RCL0	34 00	
038	-	51	
039	P⇄S	31 42	
040	STO0	33 00	
041	R↓	35 53	
042	STO1	33 01	
043	R↓	35 53	
044	STO2	33 02	
045	P⇄S	31 42	
046	RCLB	34 12	
047	RCL8	34 08	
048	-	51	
049	RCLA	34 11	
050	RCL7	34 07	
051	-	51	
052	RCL9	34 09	
053	RCL6	34 06	
054	-	51	
055	P⇄S	31 42	
056	STO3	33 03	
057	R↓	35 53	
058	STO4	33 04	
059	R↓	35 53	
060	STO5	33 05	
061	P⇄S	31 42	
062	RCL8	34 08	
063	RCL2	34 02	
064	-	51	
065	RCL7	34 07	
066	RCL1	34 01	
067	-	51	
068	RCL6	34 06	
069	RCL0	34 00	
070	-	51	
071	P⇄S	31 42	
072	STO6	33 06	
073	R↓	35 53	
074	STO7	33 07	
075	R↓	35 53	
076	STO8	33 08	
077	RCL1	34 01	
078	RCL5	34 05	
079	×	71	
080	RCL4	34 04	
081	RCL2	34 02	
082	×	71	
083	-	51	
084	STOC	33 13	
085	RCL2	34 02	
086	RCL3	34 03	
087	×	71	
088	RCL5	34 05	
089	RCL0	34 00	
090	×	71	
091	-	51	
092	STOD	33 14	
093	RCL0	34 00	
094	RCL4	34 04	
095	×	71	
096	RCL3	34 03	
097	RCL1	34 01	
098	×	71	
099	-	51	
100	STOE	33 15	
101	X^2	32 54	
102	RCLD	34 14	
103	X^2	32 54	
104	+	61	
105	RCLC	34 13	
106	X^2	32 54	
107	+	61	
108	$\sqrt{X}$	31 54	
109	1/X	35 62	
110	RCL6	34 06	
111	RCL0	34 13	
112	×	71	

REGISTERS

0 X_1	1 Y_1	2 Z_1	3 X_1'	4 Y_1'	5 Z_1'	6 X_2	7 Y_2	8 Z_2	9 X_2'
S0 a_1	S1 b_1	S2 c_1	S3 a_2	S4 b_2	S5 c_2	S6 (X_1-X_2)	S7 (Y_1-Y_2)	S8 (Z_1-Z_2)	S9

A Y_2'	B Z_2'	C $[B-C]_{MATRIX}$	D $[C-A]_{MATRIX}$	E $[A-B]_{MATRIX}$	I

67 Program Listing II

STEP	KEY ENTRY	KEY CODE	COMMENTS
113	RCL7	34 07	
114	RCLD	34 14	
115	×	71	
116	+	61	
117	RCL8	34 08	
118	RCLE	34 15	
119	×	71	
120	+	61	
121	×	71	
122	P⇄S	31 42	
123	RTN	35 22	
124	R/S	84	

STEP	KEY ENTRY	KEY CODE	COMMENTS
170			
180			
190			
200			
210			
220			

LABELS					FLAGS
A INPUT P_1	B INPUT P_1'	C INPUT P_2	D INPUT P_2'	E CALC. D	0
a	b	c	d	e	1
0	1	2	3	4	2
5	6	7	8	9	3

SET STATUS

FLAGS	ON	OFF	TRIG		DISP	
0	☐	☑	DEG	☑	FIX	☑
1	☐	☑	GRAD	☐	SCI	☐
2	☐	☑	RAD	☐	ENG	☐
3	☐	☑			n	2

Hewlett-Packard Software

In terms of power and flexibility, the problem-solving potential of the Hewlett-Packard line of fully programmable calculators is nearly limitless. And in order to see the practical side of this potential, we have several different types of software to help save you time and programming effort. Every one of our software solutions has been carefully selected to effectively increase your problem-solving potential. Chances are, we already have the solutions you're looking for.

Application Pacs

To increase the versatility of your fully programmable Hewlett-Packard calculator, HP has an extensive library of "Application Pacs". These programs transform your HP-67 and HP-97 into specialized calculators in seconds. Each program in a pac is fully documented with commented program listing, allowing the adoption of programming techniques useful to each application area. The pacs contain 20 or more programs in the form of prerecorded cards, a detailed manual, and a program card holder. Every Application Pac has been designed to extend the capabilities of our fully programmable models to increase your problem-solving potential.

You can choose from:

Statistics
Mathematics
Electrical Engineering
Business Decisions
Clinical Lab and Nuclear Medicine
Mechanical Engineering
Surveying
Civil Engineering
Navigation
Games

Users' Library

The main objective of our Users' Library is dedicated to making selected program solutions contributed by our HP-67 and HP-97 users available to you. By subscribing to our Users' Library, you'll have at your fingertips, literally hundreds of different programs. No longer will you have to: research the application; program the solution; debug the program; or complete the documentation. Simply key your program to obtain your solution. In addition, programs from the library may be used as a source of programming techniques in your application area.

A one-year subscription to the Library costs $9.00. You receive: a catalog of contributed programs; catalog updates; and coupons for three programs of your choice (a $9.00 value).

Users' Library Solutions Books

Hewlett-Packard recently added a unique problem-solving contribution to its existing software line. The new series of software solutions are a collection of programs provided by our programmable calculator users. Hewlett-Packard has currently accepted over 6,000 programs for our Users' Libraries. The best of these programs have been compiled into 40 Library Solutions Books covering 39 application areas (including two game books).

Each of the Books, containing up to 15 programs without cards, is priced at $10.00, a savings of up to $35.00 over single copy cost.

The Users' Library Solutions Books will compliment our other applications of software and provide you with a valuable new tool for program solutions.

Options/Technical Stock Analysis
Portfolio Management/Bonds & Notes
Real Estate Investment
Taxes
Home Construction Estimating
Marketing/Sales
Home Management
Small Business
Antennas
Butterworth and Chebyshev Filters
Thermal and Transport Sciences
EE (Lab)
Industrial Engineering
Aeronautical Engineering
Control Systems
Beams and Columns
High-Level Math
Test Statistics
Geometry
Reliability/QA
Medical Practitioner
Anesthesia
Cardiac
Pulmonary
Chemistry
Optics
Physics
Earth Sciences
Energy Conservation
Space Science
Biology
Games
Games of Chance
Aircraft Operation
Avigation
Calendars
Photo Dark Room
COGO-Surveying
Astrology
Forestry

GEOMETRY

These programs calculate basic geometry problems, mostly plane geometry. Calculations include points, lines, circles, intersections, distances, angles, etc.

SINE PLATE SOLUTIONS

V NOTCHES AND LONG RADII

INTERNAL AND EXTERNAL TAPERS

POINTS OF TANGENCY WITH CIRCLES AND ARCS

LINE-LINE INTERSECTION/GRID POINTS

POINTS ON A STRAIGHT LINE

GRID OF POINTS: CALCULATES ALL POINTS

GRID OF POINTS: CALCULATES DISCRETE POINTS

TANGENT CIRCLE TO TWO STRAIGHT LINES WITH A GIVEN RADIUS

DISTANCE BETWEEN LINES IN SPACE

HEWLETT hp PACKARD

1000 N.E. Circle Blvd., Corvallis, OR 97330

Reorder No. 00097-14007 Printed in U.S.A. 00097-90182
Revision B 1-78

Scan Copyright ©
The Museum of HP Calculators
www.hpmuseum.org

Original content used with permission.

Thank you for supporting the Museum of HP Calculators by purchasing this Scan!

Please to not make copies of this scan or make it available on file sharing services.