OPERATOR'S MANUAL

3468A MULTIMETER

HEWLETT PACKARD

3468A MULTIMETER OPERATOR'S MANUAL

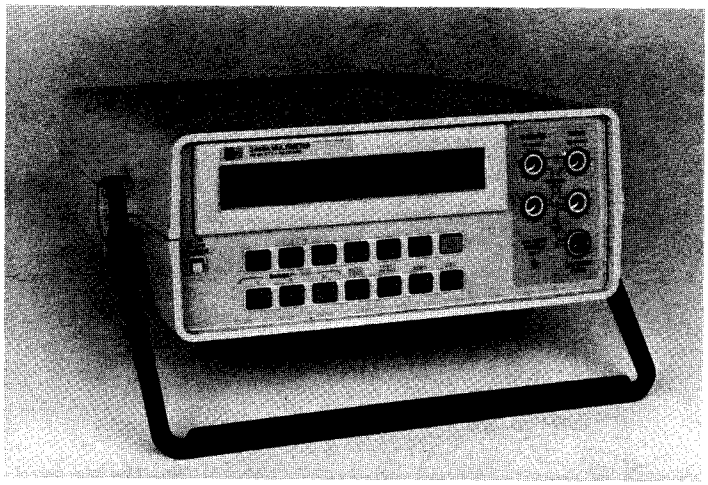

IMPORTANT NOTICE

Most -hp- service offices in the United States are NOT authorized to service and repair 3468A DMM's. Notify your local -hp- sales office for specific information on where to send the instrument for repair.

Any changes made in instruments manufactured after this printing will be found in a "Manual Changes" supplement supplied with this manual. Be sure to examine this supplement, if one exists for this manual, for any changes which apply to your instrument and record these changes in the manual.

WARNING

To help minimize the possibility of electrical fire or shock hazards, do not expose this instrument to rain or excess moisture.

©Copyright Hewlett-Packard Company 1981
P.O. Box 301, Loveland, Colorado, 80537 U.S.A

Printed: November 1981

Manual Part No. 03468-90000
Microfiche Part No. 03468-90050

TABLE OF CONTENTS

Chapter Page

I. MEET THE 3468A 1
Introduction 1
How to Use This Manual 1
Simplified Operation 5/6

Chapter Page

II. USING THE 3468A 7
Introduction 7
Operating Characteristics 7
Detailed Operating Instructions 7
AUTOZERO 8
What is Autozero? 8
How it Affects Measurements 8
CALIBRATE 10
What is Electronic Calibration? 10
Calibrate Enable 10
CURRENT 11
Measuring Current 11
DISPLAY 12
How it is Used 12
Normal 12
Message 13
User Generated Message 14
Changing the Number of Digits Displayed 14
Annunciators 16
OPTIMIZING READING RATES 17
Why Optimize? 17
Your Signal Environment 17
Integration Times 17
Autozero 18
Other Factors Influencing the Reading Rate 18
RANGING 19
What About Ranging? 19
Reading the Display 19
Autorange 20
Manual Ranging 20
REAR PANEL 21
What is on the Rear Panel? 21
The Rear Panel Switches 21
RESISTANCE MEASUREMENTS 22
Measuring Resistance 22
Other Considerations 24
TEST/RESET 25
What it Does 25
TRIGGER MODES 26
What is Triggering? 26
VOLTAGE MEASUREMENTS 27/28
Measuring Voltages 27/28

Chapter Page

III. PROGRAMMING WITH THE -hp- MODEL 41C/41CV 29
Introduction 29
What is HP-IL 29
Sending Instructions to the 3468A 31
Programming Hints 33
Receiving Data From the 3468A 34
HP-IL Interface Control 34
OUTA 36
Example 36
Comments 36
IND 36
Example 36
Comments 36
REMOTE 37
Example 37
Comments 37
LISTEN 37
Example 37
Comments 37
LOCAL 38
Example 38
Comments 38
TRIGGER 38
Example 38
Comments 38
INSTAT 38
Example 38
Comments 38
SELECT 42
Example 42
Comments 42
FINDID 43
Example 43
Comments 43
MANIO 43
Example 43
Comments 43
AUTOIO 44
Example 44
Comments 44
Writing Programs 44
Initialization 45
Building Block Programming 47
EXTENDED OHMS 49
dBm MEASUREMENTS 51
TEMPERATURE MEASUREMENTS 52
STATISTICS 54
DATA LOGGER 57
3468A Command Codes 61

TABLE OF CONTENTS (Cont'd)

Chapter Page

IV. BASIC LANGUAGE PROGRAMMING 63
Introduction 63
Trying Out a Command 63
Addressing 64
Sending Instructions to the 3468A 65
Programming Hints 66
Receiving Data from the 3468A 67
3468A Bus Capabilities 68
CLEAR 68
Examples 68
Comments 68
LOCAL 69
Examples 69
Comments 69
LOCAL LOCKOUT 69
Example 69
Comments 69
REMOTE 70
Examples 70
Comments 70
SERVICE REQUEST (SRQ) 71
How to use SRQ 71
Status Register and Status Byte 72
Setting the SRQ Mask 72
SPOLL 75
Example 75
Comments 75

Chapter Page

IV. BASIC LANGUAGE PROGRAMMING (Cont'd)
TRIGGER 78
Examples 78
Comments 78
Topics in Advanced Programming 78
EXTENDED OHMS 79
TEMPERATURE MEASUREMENTS 80
dBm MEASUREMENTS 81
STATUS BYTE COMMAND 82

Chapter Page

V. OPERATORS MAINTENANCE 83
Introduction 83
Accessories 83
Initial Inspection 83
Preparation for Use 83
Safety Considerations 87
Environmental Requirements 88
Specifications 88
Interface Connections 92
Fuse Replacement 92
In Case of Trouble 93
Warranty Information 94
How to Obtain Repair Service 95
Serial Number 95
General Shipping Instructions 95
Further Considerations 96

APPENDICES
A. 97
B. 101

LIST OF TABLES

Table Page

2-1. Operating Characteristics 7
2-2. 3468A Messages 13
2-3. Annunciators 16
2-4. Valid 3468A Ranges 19
2-5. Nominal currents through Unknown Resistance 22
2-6. Self Test Error Messages 26
5-1. Accessories 83
5-2. Line Voltage Options 84
5-3. Specifications 89

LIST OF ILLUSTRATIONS

Figure Page

2-1. Current Measurements 11
2-2. Autorange Hysteresis 20
2-3. 3468A Rear Panel and Switches 21
2-4. Resistance Measurements 22
2-5. Voltage Measurements 27/28
4-1. Instruction Example 65
4-2. Status Register 72
4-3. Status Byte and SRQ Mask 72
4-4. Status Byte 75
5-1. 3468A Rear Panel 85
5-2. Power Cables 85
5-3. Typical HP-IL System Interconnection 92
A-1. Typical HP-IL System 97

Chapter I
Meet The 3468A

Introduction

Your new 3468A is a fully programmable HP-IL digital multimeter. HP-IL (Hewlett-Packard Interface Loop) is a serial interface allowing the -hp- Model 41C/CV family of calculators or desktop computers such as the -hp- Model 85 to control your 3468A. In an automatic test or on the bench, the 3468A offers 3 1/2 to 5 1/2 digit resolution for measuring dc volts, true RMS ac volts, 2- and 4- wire ohms, and dc and RMS ac current. The 3468A offers dc voltage performance from 1μvolt sensitivity up to 300 volts (full scale), true RMS ac voltage capability up to 300 kHz, and resistance measurements from 1 mΩ sensitivity to 30MΩ (full scale). Its dc and true RMS ac current measuring capability is from 10μA sensitivity up to 3A. The optional battery pack provides up to 5 hours of continuous portable operation.

By selecting the number of digits displayed and using the autozero feature, the 3468A allows you flexibility in measurement speed and accuracy. Up to 31 readings per second can be made with the 3468A in the 3 1/2 digit mode. The fast autorange feature of the 3468A allows fast bench measurements over a wide dynamic range.

The alphanumeric Liquid Crystal Display (LCD) gives you measurement units as part of the reading for easy-to-read, unambiguous answers. The HP-IL talk, listen, remote, and SRQ status information is also available with LCD annunciators. The SRQ button can be used to flag or interrupt your calculator from the front panel of the 3468A.

Furthermore, to lower your cost of ownership, the 3468A is calibrated electronically, either manually from the front panel or remotely in an automatic calibration system. There are no internal adjustments and the calibration of all functions is done without the removal of covers. The self-test function verifies most of the internal circuitry of the 3468A indicating proper operation of the multimeter.

How to Use This Manual

This Operators Manual has been designed with you the operator in mind; to serve as a complete reference document for using the 3468A as a solution to your measurement needs. It covers both bench use and remote programming. Maintenance procedures, such as installation, are placed later in the manual Chapter V. If, however, you have just received your 3468A you may want to read that information. A separate service manual for the 3468A contains the information on calibration, performance testing, and service.

Familiarize yourself with the 3468A by looking through this manual. The best way to feel at ease with the instrument is to sit down with this manual and the 3468A and key in the examples shown. It won't take long to become familiar with the instrument and its many features.

The following paragraphs will serve as a guide to direct you to the remaining chapters in this manual. Acquaint yourself with the manual before using your new Hewlett-Packard Model 3468A Digital Multimeter by reading through these paragraphs.

Using the 3468A, Chapter II

Chapter II discusses each function and feature of the 3468A in detail. This chapter also covers topics such as optimizing reading rates, alternate triggering modes, and the display. The topics are alphabetically arranged for easy reference. Most of the information in this chapter will prove to be very helpful when you are remote programming the 3468A.

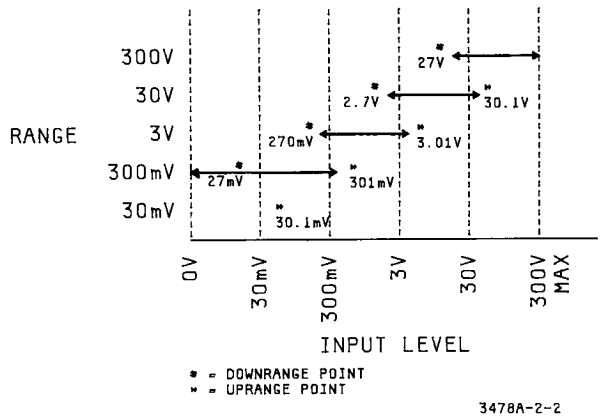


```
01♦LBL "READ"   Label READ
02 "DATA"       }
03 0            } Find beginning of DATA file
04 SEEKR        } on cassette tape
05 1.010        }
06 STO 00       } Set up loop counter for ten
                } sets of readings
07♦LBL 01       }
08 11.020       } Read one set of ten readings
09 READRX       }
10 11.020       } Print set
11 PRREGX       }
12 ISG 00       }
13 GTO 01       } End if ten sets have been
                } read, else go to line 07
14 .END.
```

Programming With The -hp- Model 41C/CV, Chapter III

The -hp- Model 41 family of handheld calculators can be used to program your 3468A. This chapter teaches you how to execute simple, one-line commands from your calculator and then shows you how to write simple programs for controlling the 3468A. At the end of the chapter are several applications programs designed to solve frequently encountered measurement problems.

BASIC Language Programming, Chapter IV

Desktop computers with HP-IL capability, such as the -hp- Model 85, may also be used to program the 3468A. Chapter IV deals entirely with this subject and provides numerous examples to enhance the discussion. Several applications programs are provided at the end of the chapter.

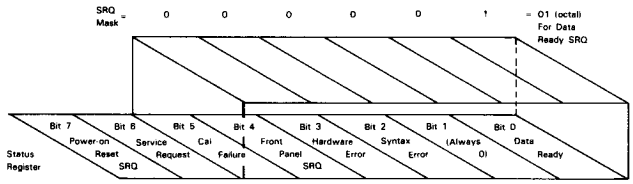

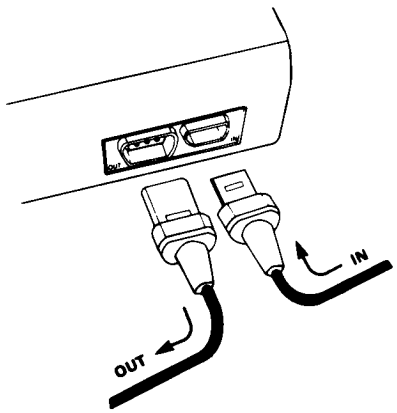

Operators Maintenance, Chapter V

This chapter addresses installation procedures, a complete table of specifications, what to do if you suspect problems with the 3468A, and many other items of special interest to the operator.

Most -hp- service offices in the United States are NOT authorized to service and repair 3468A DMM's. Contact your local -hp- sales office for specific information on where to send the instrument for repair.

HP-IL Description, Appendix A

HP-IL (Hewlett-Packard Interface Loop) is an easy to use and understand interface that allows handheld calculators, as well as desktop computers, to interact with the 3468A and perform many versatile printer, mass storage and control operations. Appendix A provides a complete description of the HP-IL Interface.

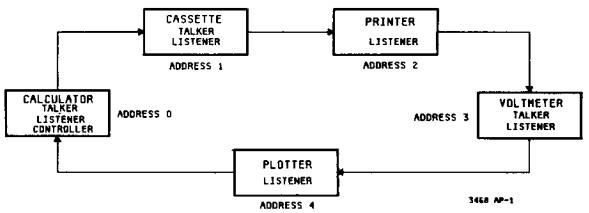

Turning it On

Before applying ac power to the 3468A, check the rear panel line voltage option label to be certain the instrument is set for the nominal line voltage in your area. If necessary, refer to the installation information in Chapter V. As you press the line switch, carefully watch the display as the 3468A goes through a complete internal self test.

DISPLAY **RESULT**

The 3468A performs a complete internal self test at power-on. Carefully watch the display, especially the 12 annunciators along the bottom. Every segment in the display (except for the top dot in the colon) is turned on for approximately 2 seconds. Following this, a complete turn-on self test is performed. The 3468A is then reset and returns to its turn-on state. A more complete description of the Self Test is found in Chapter II, page 25. Should any of the five elements of the self test fail, a message will be displayed identifying the general circuit area where the failure occurred. This can greatly reduce initial troubleshooting time.

This entire process takes only a moment to complete. At this point the 3468A is ready to use and is set to the following state:

Function: DC Volts
Range: Autorange on
Display: 5 1/2 Digits of Resolution
Trigger: Internal Trigger
Auto-zero: On

Simplified Operation

The front panel of the 3468A is designed for ease of use by logically grouping keys that are functionally related. This chapter is intended to provide a basic working knowledge of the 3468A in making typical measurements.

Measurement Function Keys

Use the first six keys along th
top row to select the type o
measurement you want to make.

DC Voltage

AC Voltage

DC Current

AC Current

2-Wire Ohms

4-Wire Ohms

Number of Digits Displayed

The "SHIFTED" functions of the range keys are used to select alternate numbers of display digits. This feature is provided as a means to increase reading rates, but with a trade-off of noise rejection and resolution. Be sure to read DISPLAY and OPTIMIZING READING RATES in Chapter II.

3

3 1/2 digit mode, (fastest reading rate, least resolution and little noise rejection).

4

4 1/2 digit mode.

5

5 1/2 digit mode, (best noise rejection, slowest reading rate)

F

These ke
proper r
ment. Pr
select th
Note the
the displ

Display

12 character alphanumeric display with 12 dedicated annunciators. The display is read directly in engineering units, i.e., VDC for DC Volts, MOHM for Meg-ohm resistance, etc.

Blue

[shift] pressed bef
executes the fu
above that key.

Measurement Function Keys

Use the first six keys along the top row to select the type of measurement you want to make.

- ⎓ V — DC Voltage
- ~V — AC Voltage
- ⎓ A — DC Current
- ~ A — AC Current
- 2 WIRE Ω — 2-Wire Ohms
- 4 WIRE Ω — 4-Wire Ohms

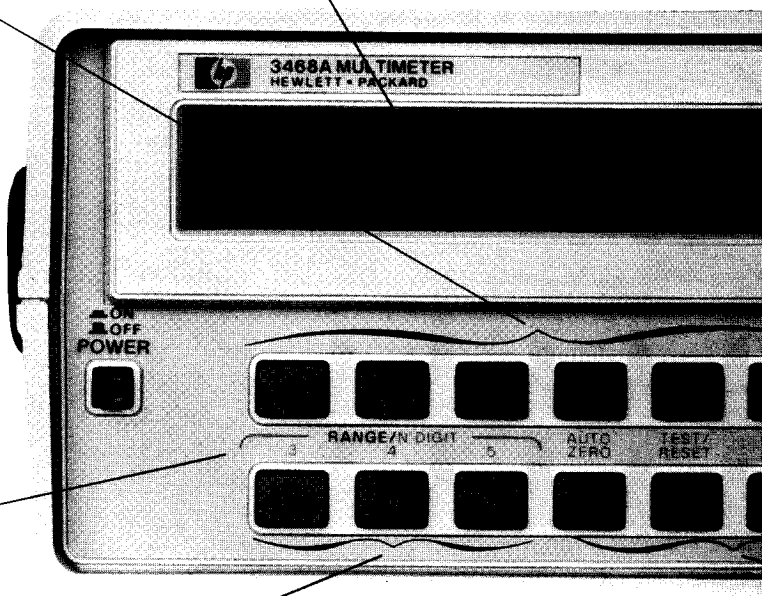

Number of Digits Displayed

The "SHIFTED" functions of the range keys are used to select alternate numbers of display digits. This feature is provided as a means to increase reading rates, but with a trade-off of noise rejection and resolution. Be sure to read DISPLAY and OPTIMIZING READING RATES in Chapter II.

3 — AUTO/MAN — 3 1/2 digit mode, (fastest reading rate, least resolution and little noise rejection).

4 — ⇧ — 4 1/2 digit mode.

5 — ⇩ — 5 1/2 digit mode, (best noise rejection, slowest reading rate)

Range Keys

These keys are used to select the proper range for the measurement. Press any of the keys to select the manual range mode. Note the M RNG annunciator in the display.

AUTO/MAN — Pressing this key toggles between Auto and Manual ranging.

⇧ — Upranging.

⇩ — Downranging.

These keys are used
special operating featur
3468A. The next two
provide a detailed expl
these keys. The blue
allows for select
"SHIFTED" functions o
tom row of keys. You c
tell when you have pr
Shift key; the SHIFT a
will appear in the displ
disappear when the f
executed or shift is
again.

INT TRIG — **Internal Trigger** is selecte
key. In this mode, th
triggers itself for th
possible reading rate.

Blue Key

[shift] pressed before another key executes the function shown above that key.

ΩSense

These terminals are used for the voltmeter sense leads when making 4-wire ohms measurements.

Input

These are the voltmeter and 2-wire ohms input terminals.

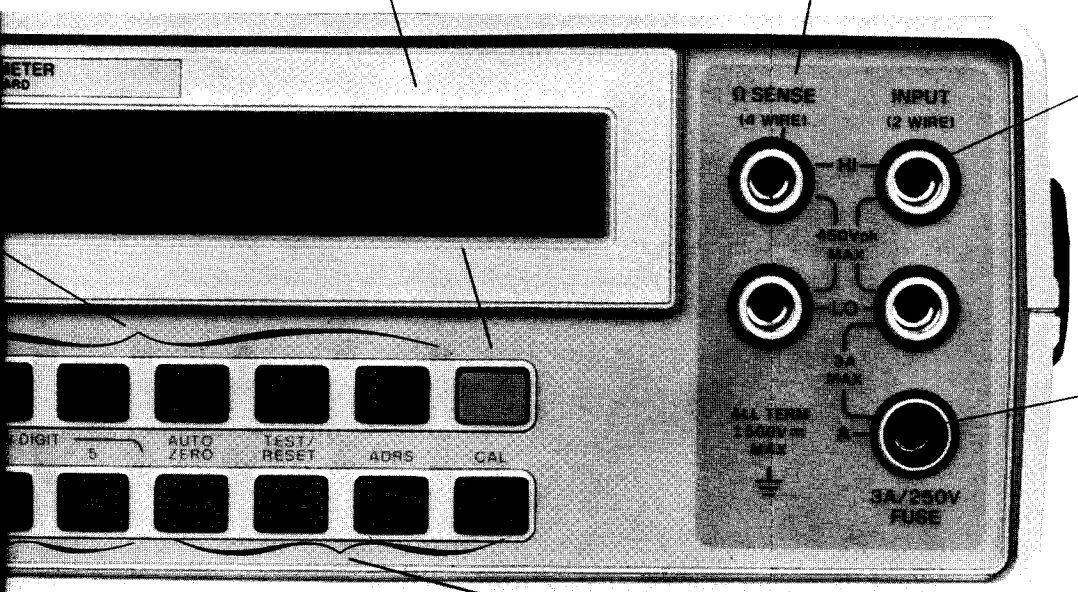

A

This is the Amps input terminal and is used with the INPUT LOW terminal. (3 Amp fuse protected)

Additional Feature Keys

These keys are used to select special operating features of the 3468A. The next two chapters provide a detailed explanation of these keys. The blue shift key allows for selecting the "SHIFTED" functions of the bottom row of keys. You can always tell when you have pressed the **Shift** key; the SHIFT annunciator will appear in the display. It will disappear when the function is executed or shift is pressed again.

INT TRIG

Internal Trigger is selected by this key. In this mode, the 3468A triggers itself for the fastest possible reading rate.

Autozero is a function that allows you to enable or disable the internal zero-correction circuitry. Turning Autozero off increases the reading rate with a trade-off of long term stability.

SGL TRIG

Pressing the **Single Trigger** key causes the 3468A to take one reading and wait for the next trigger. Note the S TRG annunciator in the display.

Test/Reset performs an internal self test then resets the 3468A to its turn-on state. Any errors in the self test are noted in the display.

SRQ

The front panel **SRQ** (Service R quest) key is an HP-IL operati that enables you to manually i terrupt the controller. This key enabled by setting the SRQ mas

The 3468A HP-IL **Address** displayed in response to the A dress key.

LOCAL

Another HP-IL operation, **Loc** returns the 3468A to front pan control from the REMOTE mode

The 3468A features total ele tronic calibration. The **Cal** key used as part of that procedur See the 3468A Service Manua -hp- part number 03468-90001

ΩSense

These terminals are used for the voltmeter sense leads when making 4-wire ohms measurements.

Input

These are the voltmeter and 2-wire ohms input terminals.

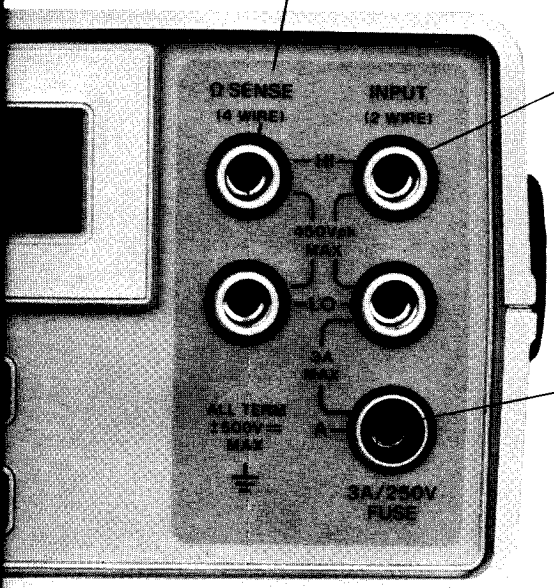

A

This is the Amps input terminal and is used with the INPUT LOW terminal. (3 Amp fuse protected)

Additional Feature Keys

Autozero is a function that allows you to enable or disable the internal zero-correction circuitry. Turning Autozero off increases the reading rate with a trade-off of long term stability.

SGL TRIG

Pressing the **Single Trigger** key causes the 3468A to take one reading and wait for the next trigger. Note the S TRG annunciator in the display.

Test/Reset performs an internal self test then resets the 3468A to its turn-on state. Any errors in the self test are noted in the display.

SRQ

The front panel **SRQ** (Service Request) key is an HP-IL operation that enables you to manually interrupt the controller. This key is enabled by setting the SRQ mask.

The 3468A HP-IL **Address** is displayed in response to the Address key.

LOCAL

Another HP-IL operation, **Local** returns the 3468A to front panel control from the REMOTE mode.

The 3468A features total electronic calibration. The **Cal** key is used as part of that procedure. See the 3468A Service Manual, -hp- part number 03468-90001.

Chapter II
Using The 3468A

Introduction

The -hp- Model 3468A Digital Multimeter is a very powerful bench instrument equally at home in the lab or production areas. In the first chapter you saw the very basic features of the 3468A; in this chapter you will learn to use those features to solve your measurement needs. The chapter starts with a short table of Operating Characteristics. Following this is detailed operating information arranged alphabetically by subject. This information in this chapter presents the most comprehensive description of the multimeter's functions. Whether you use your 3468A as a stand alone bench instrument or coupled with a computer or handheld calculator for a measurement system, the information in this chapter will prove invaluable.

Operating Characteristics

The Operating Characteristics of the 3468A are detailed in Table 2-1. This table is an abbreviated set of specifications. You will probably find that this table answers most of your questions about the capabilities of the multimeter without poring over several pages of specifications. The complete Table of Specifications for the 3468A is given in Chapter V.

Detailed Operating Instructions

The goal of this chapter is to provide easy to find answers to the vast majority of questions you may have about using your 3468A. To this end, this chapter is divided into 11 major subject headings. Each subject presents the most comprehensive information about a particular feature or function of the 3468A. At the end of most subjects will be a short list of HP-IL remote programming commands that pertain to that subject.

Table 2-1. Operating Characteristics

DC VOLTS	1μvolt sensitivity (.3V range) to 300V Full Scale Zin: $>10^{10}\Omega$, .3V and 3V range 10 MΩ ± 1%, 30V and 300V range
AC VOLTS	1μvolt sensitivity (.3V range) to 300V full scale True RMS Responding, Crest Factor = 4:1 at full scale Bandwidth: 20Hz to 100KHz (300KHz on 30V range) Zin: 1 MΩ ± 1%, in parallel with <60pF
DC AMPS	10μA sensitivity to 3A full scale Maximum Shunt Resistance = .33Ω Maximum Burden at Full Scale = <1V
AC AMPS	1μA sensivitity (.3A range) to 3A Full Scale Maximum Shunt Resistance = .33Ω Bandwidth: 20Hz - 20kHz Maximum Burden at Full Scale = <1V
OHMS	1mΩ sensitivity (300 ohm range) to 30 megohms Full Scale Open Circuit Voltage: <6.5V Current through Rx: 300Ω, 3KΩ range - 1mA 30KΩ range - 100μA 300KΩ range - 10μA 3MΩ range - 1μA 30MΩ range - 100 nA

AUTOZERO

What is Autozero?

The autozero key allows the user to selectively enable or disable the internal zeroing technique used in the 3468A. Enabling autozero insures the user that any offset errors generated internal to the 3468A are continuously nulled with each reading. This renders the most accuracy. There are, however, many applications where disabling the autozero is advantageous. With autozero off, the internal reading rate nearly doubles. This would be important in programmable applications where speed is critical. Furthermore, the 3468A input circuitry remains in a completely static state with autozero off. This is useful when making measurements in extremely high impedance circuits where the internal switching transients of the 3468A may affect the reading accuracy. Of course, any range or function change that takes place with autozero off is automatically accompanied with an autozero update. The thermal stability of the measurement environment is the most important factor in deciding whether or not to turn autozero off. By simply keeping the temperature of the 3468A at a fixed value, you can turn autozero off without adverse effects.

How it Affects Measurements

Do This

Turn the 3468A off, then on again.

press:

Notice that the display is being updated more frequently, indicating a faster reading rate. Also notice that the AZ OFF annunciator is now on in the display. The Autozero feature is now turned off. Pressing the key sequence again will turn Autozero back on.

DC Voltage and Current

Autozero is used to correct for small offsets (thermal, etc) in the DC input amplifier circuitry of the multimeter. With the Autozero feature enabled (Autozero is enabled at power turn-on) the 3468A takes two measurements per reading: a "zero" measurement and a measurement of the input voltage. The displayed reading is the algebraic difference between the two measurements. The 3468A makes the zero measurement by disconnecting the multimeter's input terminals, and then shorting the internal input circuitry to circuit common. It then switches back for an input voltage measurement. All switching is internal and is automatic.

With autozero turned off, whenever a new function or range is selected the 3468A immediately takes one final zero measurement and stores the results in its internal memory. Subsequent measurements of the input voltage subtract this one zero measurement to correct the reading. Since only the input voltage is measured, the reading rate almost doubles.

AC Voltage and Current

Since the input signal conditioning circuitry for these two functions is ac-coupled, it is not necessary to correct for dc offsets in the input circuitry. Thus the auto zero function is only used to null offsets in the A/D converter. Turning autozero off in ac volts and ac current eliminates the zero reading of the A/D converter, resulting in a faster reading rate.

Resistance Measurements

For 2-wire ohms measurements the autozero feature performs just as it does for DC voltage measurements. Resistance measurements using the 4-wire mode require different considerations.

The zero measurement is normally made with the input amplifier shorted to circuit common. In the 4-Wire ohms mode, the input amplifier is shorted to the 4-Wire SENSE LO terminal for the zero measurement. With autozero "ON", the zero reading is updated for each measurement cycle. With autozero "OFF", the reading is not updated and may cause an ohms measurement error if the resistance of the test leads change. To prevent this error, a new zero reading should be taken by changing or updating the state of the 3468A anytime test leads are changed.

See Also: Display (Integration Time) and Optimizing Reading Rates

Commands

Z0 Turns autozero off
Z1 Turns autozero on

CALIBRATION

What is Electronic Calibration?

One of the many features of the 3468A is electronic calibration. This represents a totally new concept in Hewlett-Packard voltmeters. Before, voltmeters had to be removed from their mounting, have their covers removed, and mechanical adjustments made. Then the voltmeter had to be reassembled and installed. But now, calibration may be done by simply applying a stimulus and pressing a front panel button. There is absolutely no disassembly required. It is beyond the scope of this section to present the entire calibration procedure. For complete calibration information refer to the 3468A Service Manual, -hp- part number 03468-90001.

Briefly, Electronic Calibration is done by applying a known voltage (or resistance or current) to the voltmeter and telling it the exact value of that input. The voltmeter then takes ten readings and compares the average of those readings to the known value. A "CALIBRATION CONSTANT" is calculated to correct the reading to the known value and then stored in the voltmeter's memory. These Calibration Constants are generated for each range and function of the meter. All subsequent measurements are corrected by the constants. The Calibration Constant memory is backed-up by a long life battery to maintain the constants when power is turned off.

Calibrate Enable

On the rear panel of the 3468A is a bank of eight small switches. Switch 8 (rightmost) is the CAL ENABLE switch and when set to the down position enables the 3468A to be calibrated. A "C:" will appear between the numeric field and the alpha field in the display when calibration is enabled. This switch should not be set except when qualified service trained personnel are to perform the calibration procedures. Enabling the CAL switch may cause loss of calibration if proper procedures are not followed carefully.

Commands

C Calibrate
(see the 3468A Service Manual)

Measuring Current

Your 3468A has the capability of measuring DC or True RMS AC Currents up to 3 amps. The current function is protected by a 3 Amp, 250V fuse. If the fuse opens, refer to Chapter V before replacing. The illustration below shows the internal current shunt and fuse used in the 3468A. The unknown current flowing through the current shunt produces a voltage which can then be measured.

Current inputs of greater than 1 amp may cause the current shunt to change value slightly due to self heating (somewhat like a thermistor). Sufficient time should be allowed for the circuitry to settle after the measurement is complete, before other critical current measurements are made.

DC Current [⎓ A]

The DC Amps key puts the 3468A into the dc current measuring mode. When measuring currents, remove all other tests leads from the 3468A front panel. There is one range available for dc current measurements: 3 amp range.

AC Current [~ A]

Measuring ac current is identical to dc current, except that the AC Amps key is used to select the measurement function. Also, two ranges are available for the measurement.

HP-IL Commands

F5 Selects DC Current mode
F6 Selects AC Current mode

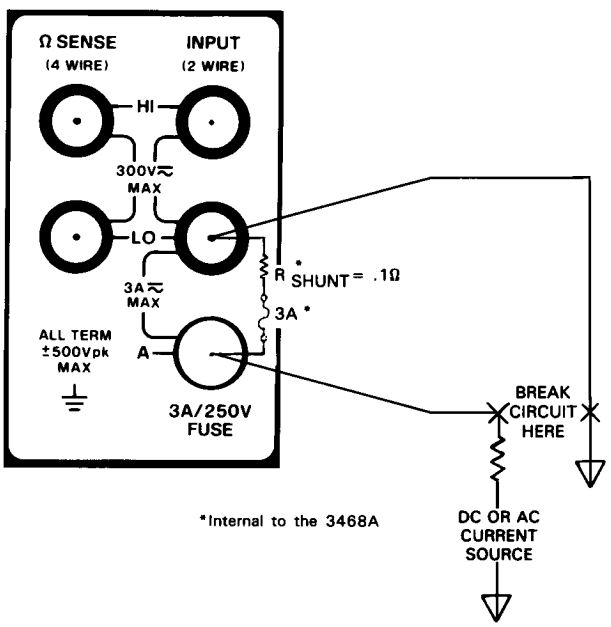

Figure 2-1. Current Measurements

DISPLAY

How it is Used

Another of the unique features of the 3468A is the 12 character alphanumeric display with 12 dedicated annunciators. The alphanumeric display may be used in one of three modes: NORMAL, MESSAGE, or USER GENERATED MESSAGE. The annunciators are used to indicate the current state of the multimeter's features (SRQ, autozero, 2- or 4- wire ohms, etc.).

Do This

press: 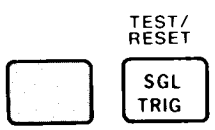

This puts the 3468A in its SELF TEST mode. For now, just watch the display and notice the 12 characters in the display and the 12 annunciators.

Normal

In the NORMAL mode of operation the display is used to indicate the results of the measurement, whether dc voltage or ohms, etc. The measurement is displayed in the 2nd through 7th characters in the display. The first digit displays the polarity (+ or −) of the reading. The measurement function (and, in some instances, an indication of range) is given in the last four characters of the display. The maximum display is 301000 with the decimal point appropriately placed for the range.

Do This

press:

This puts the meter in the dc volts function, manual range mode. Note the M RNG annunciator in the display.

press: 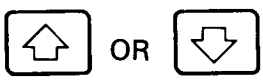

Press these keys several times and watch the display as the decimal point moves across, and as the display indicates VDC for Volts DC. The display is always read directly. Do the same in the 2-wire ohms mode. Watch as the display indicates OHM, KOHM (kilohms) and MOHM (Meg-ohms).

Abnormal Multimeter Readings

If a reading is larger than a particular range can display, the display will indicate an "OVLD" (overload) with the measurement function and decimal point still displayed.

If the A-D convertor is inoperative, the display will indicate "ERROR 8" or "A-D ERROR". The 3468A will continue to try to make a reading, and if it succeeds, it will display the reading.

Message

It was demonstrated in the last two paragraphs that the 3468A is capable of displaying error messages. There are several other messages the 3468A may display. For example:

Do This	
press: [ ] [CAL / LOCAL]	The display should now indicate "ENABLE CAL". This message indicates that the calibration switch must be set to the calibrate position before the instrument can be calibrated.
OR [ ] [ADRS / SRQ]	The display now shows the HP-IL address of the 3468A.

These are two more examples of messages which the 3468A may display. Other possible messages will fall into one of three categories:

Table 2-2. 3468A Messages

ERROR MESSAGES (see Self Test)

ERROR 1 - Calibration RAM error
ERROR 2 - Internal microprocessor RAM error
ERROR 4 - Internal microprocessor ROM error
ERROR 8 - A/D converter error detected during Self Test
A-D ERROR - An A/D converter error was detected while trying to take a reading.

If more than one failure is detected, then "ERROR dd" will appear in the display. The decimal number, dd, represents the summation of the individual error message numbers. For example, ERROR 9 would indicate that errors 1 and 8 were detected.

Table 2-2. 3468A Messages (Cont'd)

CALIBRATION MESSAGE (see the 3468A Service Manual)

INV CAL F&R
This indicates that the present function and range does not allow calibration constants to be calculated. That is, it is either an invalid range or it uses a calibration constant calculated by another function and range.

INV CAL SIG
Indicates that the 3468A cannot calibrate to the applied input signal.

INV CAL ZERO
This means that the zero calibration constant is not valid when attempting to calibrate the gain.

ENABLE CAL
The CAL ENABLE switch must be set to the CAL position (down) in order to do a calibration.

INV CAL NUM
The number put in the display is not an acceptable number to calibrate to.

CAL RAM BAD
The calibration RAM did not accept the data written to it.

GENERAL USAGE MESSAGE

ADDRESS 22
This is the HP-IL address of the 3468A. The actual address of the the instrument will depend upon its position in the interface loop. See Chapters III and IV. The factory preset address is 22.

OVLD
This stands for overload and indicates that the input is too large for that particular range.

INVALID
The selected combination of range and function is not a valid combination. This error can only occur when the 3468A is being remote programmed.

User Generated Message

Under computer control the 3468A can display your own user messages of up to 12 characters. Refer to Chapter III or Chapter IV, for more information on this.

Commands

D2text Places the message "text" into the display
D1 Returns the 3468A to NORMAL display.

Changing the Number of Digits of Display

When you are displaying measurement results (NORMAL mode), you also have a choice of the number of digits displayed, i.e., resolution of the reading. This not only has a great effect on the reading rate but also affects the Normal Mode Rejection (NMR).

Do This

press:

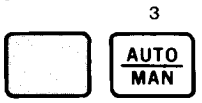

This puts the 3468A into the 3 1/2 digit display mode. This mode has the fastest reading rate but the lowest resolution and little noise rejection. The integration time in this mode is .1 power line cycle.

OR

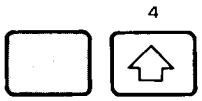

This is the 4 1/2 digit display mode. This mode provides 59 db NMR with an integration time of 1 power line cycle (16.66 mS at 60Hz, 20 mS at 50Hz).

OR

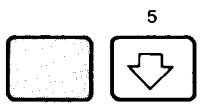

The 5 1/2 digit display mode provides the best resolution and greatest amount of noise rejection. In this mode, 10 readings are taken, each with 1 power line cycle integration time, and averaged together. This provides 80 db of noise rejection.

Integration Times

As mentioned above, changing the number of display digits does more than merely change the resolution of the multimeter. It actually changes the "INTEGRATION TIME", which determines the reading rate. This in turn will greatly affect the Normal Mode Rejection (NMR) of the 3468A. The 3468A uses an integration type of A/D converter. Integration is a process where the effects of line related noise are averaged to zero over the period of an integral number of power line cycles (PLC's) during an A/D conversion. The integration time is not the same as the time for one measurement. The integration time is the time period, in PLC's, during which the input voltage is sampled by the voltmeter. At 4 1/2 digit display, the time required for one integration cycle is one PLC: 16.66 mS at 60Hz line frequency, 20 mS for 50Hz. The integration time is determined by the setting of the 50/60Hz line switch on the rear panel. In the 3 1/2 digit mode, the integration time is .1 PLC. Normal Mode Rejection (NMR)is the ability of a voltmeter to accurately measure dc voltages in the presence of ac voltages at power line frequencies. The 3468A has much better NMR at 4 1/2 digit display than it does at 3 1/2 digit display (59 db vs. Odb). The greatest amount of NMR is available from the 5 1/2 digit mode (80 db) where ten (10) readings are taken at 1 PLC integration time and averaged together.

Annunciators

The 12 display annunciators, located along the bottom of the display, are used to indicate the state of the 3468A.

Table 2-3. Annunciators

Annunciator	Indication
SRQ	The SRQ annunciator indicates that the 3468A is trying to request service from the controller. Refer to Chapter III and Chapter IV.
LSTN	The LSTN (LISTEN) annunciator turns on when the 3468A is addressed to listen via the HP-IL.
TLK	The TLK annunciator means that the 3468A has been addressed to talk via the HP-IL.
RMT	RMT indicates that the 3468A is under remote control. The front panel keyboard is inactive except for the LOCAL and SRQ keys (see LOCAL and LOCAL LOCKOUT in the next chapter).
MATH	MATH is not used on the 3468A.
AZ OFF	The Autozero feature of the 3468A is disabled.
2Ω	The 3468A is in the 2-wire ohms mode.
4Ω	The 3468A is in the 4-wire ohms mode.
M RNG	This annunciator indicates that the 3468A is in the manual ranging mode; auto-range is inactive.
S TRIG	Single trigger means that the internal trigger is disabled. The voltmeter idles until either the single trigger key is pressed again, or a TRIGGER message is received over the Loop.
CAL	The CAL annunciator will turn on if the 3468A requires calibration in the selected range and function.
SHIFT	This annunciator indicates that the [SHIFT] key has been pressed, enabling the shifted functions. The annunciator will go off when either the function is executed or the [SHIFT] key is pressed again.

OPTIMIZING READING RATES

Why Optimize?

There are several reasons why you would want to optimize the rate at which readings are taken by the 3468A. Perhaps you are using a scanner to measure a large number of points where a faster reading rate would mean a better picture of what is happening at a single point in time. Or maybe you need to read fast so that you don't waste valuable computer time waiting for a measurement result. Whatever your reason for optimizing reading rates, the 3468A can solve many of these application problems. Your maximum reading rate with the 3468A is influenced by several factors. These include the signal environment (line related and broadband noise, thermals, etc.), the desired accuracy, and convenience features such as autorange or autozero. The speed and timing of the A/D process is dependent upon a number of factors. The number of digits of resolution selected, whether or not the autozero feature is enabled, and the selected function determine how long it takes for the A/D to make a conversion.

Your Signal Environment

The signal that you are trying to measure is subject to line related and broadband noise which can interfere with your measurement. The 3468A works to reduce or reject this kind of noise by using a form of Analog to Digital (A/D) conversion called integration. Integration is a process where line related noise is averaged to zero over the period of an integral number of power line cycles (PLC's) during an A/D conversion. The measure of the ability of the multimeter to measure dc voltages in the presence of ac voltages (at power line frequencies) is called Normal Mode Rejection (NMR). The NMR of the 3468A is dependent upon the number of digits displayed. An important part of this process is to make certain that the 50/60 Hz line switch (S1 on the rear panel) is set properly: up for 50Hz line frequency and down for 60 Hz.

Integration Times

Changing the number of digits of display does more than change the resolution of the reading. It actually changes the "INTEGRATION TIME" which determines the reading rate. The integration time is not the same as the time for one measurement, the integration time is the time period, in PLC's, during which the voltmeter samples the input voltage. At 4 1/2 digits of display, the time required for one integration period is one PLC: 16 2/3 mS at 60Hz line frequency or 20mS at 50Hz. At 3 1/2 digits of display, the integration time is .1 PLC. Normal Mode Rejection (NMR) is a measure of the ability of the voltmeter to accurately measure dc voltages in the presence of ac voltages at power line frequencies. The 3468A has much better NMR at the 4 1/2 digits of display (59 db) than at 3 1/2 digits (0db) because of the integration times. At 5 1/2 digits of display, the 3468A takes ten (10) readings, spaced a fraction of a line cycle apart, in the 4 1/2 digit mode and averages them together. This provides the greatest amount of noise rejection (80db).

Autozero

The thermal stability of the measurement environment is also a very important consideration. If you are making measurements in a stable temperature environment, disabling the autozero function can nearly double the reading rate with almost no loss in accuracy. Any range or function change that takes place is automatically accompanied by an autozero update which removes any accumulated offsets.

Other Factors Influencing the Reading Rate

1. You can speed the reading rate by selecting a fixed range instead of allowing the multimeter to autorange every reading.

2. AC voltage measurements have a built-in 600mS settling time. Resistance measurements can be made as fast as DC voltage measurements except on the 3Mohm and 30Mohm ranges where a settling time (20mS and 200mS respectively) is needed for accurate measurements.

3. The maximum possible reading rate is with 3 1/2 digits displayed, autozero off, any DC voltage function, 60 Hz power selected, manual range, a positive voltage measured, and internal trigger selected.

4. It is important to note that even though the 3468A may be taking readings at a faster rate, the display is only updated at a maximum rate of five times per second. Faster reading rates are intended for and only accessible through HP-IL.

RANGING

What About Ranging?

Selecting the proper range on the 3468A may be done either automatically by the multimeter, or manually with the front panel keys. The fast autoranging in the 3468A provides quick bench measurements.

Reading the Display

Do This	
	Short the 3468A's input terminals.
press: AUTO/MAN	Notice that the M RNG annunciator turns on in the display. This indicates that the meter is in the manual range mode. Pressing this key again returns the meter to the autorange mode.
press: ⇧ OR ⇩	Press each of these keys several times. Watch the decimal point as it moves across the display. Also notice the range annunciator in the display. Try this in all the measurement function modes to see the possible range displays.

The display is always read directly and gives an indication of the range as a combination of decimal point and function display. Try connecting a variable dc power supply to the multimeter. Make sure that the meter is in the DC volts function and autorange mode. As you adjust the power supply, watch the display. The display will momentarily go blank as the meter changes ranges. You might see a reading such as .047215 VDC. Reading the display directly, this would indicate a measurement of 47.215 milli-volts dc.

Table 2-4. Valid 3468A Ranges

Function	Ranges	Display Indication	HP-IL Code
DC Volts	.3V,3V,30V,300V	VDC	R1,R2,R3,R4
AC Volts	.3V,3V,30V,300V	VAC	R1,R2,R3,R4
DC Current	3A	ADC	R1
AC Current	.3A 3A	AAC AAC	R1 R2
Resistance	300Ω 3KΩ, 30KΩ,300KΩ 3MΩ, 30MΩ	OHM KOHM MOHM	R1 R2,R3,R4 R5,R6

If the multimeter is in the manual range mode, the display will indicate an overload (OVLD) when the input is greater than the particular range can handle.

Autorange

Autoranging on the 3468A is done by taking readings internally in the 4 1/2 digit mode. Measurements are made on successive ranges until one is found where the reading is between full scale (301000 counts) and approximately 9% of full scale (027000 counts).

HP-IL Command

RA Selects autorange mode

Autorange Hysteresis

In the autorange mode, the multimeter will up range (go to a higher range) if the display reading exceeds (±) 301000 counts or it will down range (go to the next lower range) if the display reading decreases below (±) 027000 counts. This assumes a 5 1/2 digit mode. These numerical autorange points are irrespective of decimal point placement. The difference between the two points is called the autorange hysteresis and is illustrated in Figure 2-2 for DC Volts. Autoranging in other functions is similar.

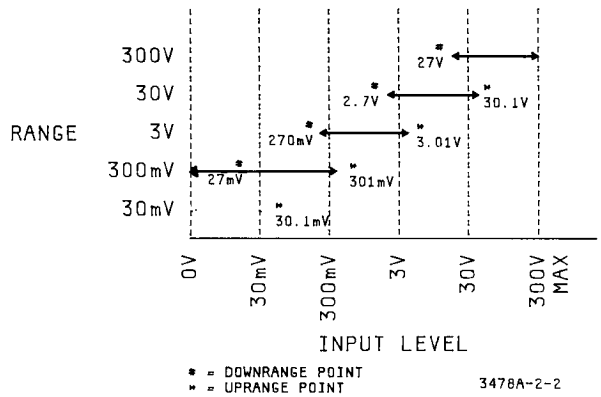

Figure 2-2. Autorange Hysteresis

Manual Ranging AUTO MAN

The 3468A is put in the manual range mode in one of three ways: pressing the AUTO/MAN (Autorange/Manual range) key, which will cause the meter to maintain its present range; the UP-ARROW key, which will cause the meter to go to the next higher range; or the DOWN-ARROW key to go to a lower range. In any case, when the 3468A is in the manual range mode, the M RNG annunciator is on in the display. Pressing the AUTO/MAN key restores autoranging.

HP-IL Command

see Table 2-4.

REAR PANEL

What is on the Rear Panel?

Figure 2-3 illustrates the 3468A rear panel. Notice especially the line voltage option sticker, the HP-IL input/output plug, and the group of switches. Before plugging the 3468A into an ac power source make certain that the option marked on the sticker coincides with the nominal line voltge of the source. The line voltage option for the 3468A may be changed only by qualified service trained personnel. See the 3468A Service Manual.

The Rear Panel Switches

Switch number 1, left-most switch, sets the 3468A to the HP-IL Talk-Only mode when the switch is in the "up" position. See Chapter III and IV.

Switch number 2 and 4 are not used and are covered by the rear panel.

Switch number 3 (up) sets the power-on SRQ (PON SRQ) feature. When this feature is enabled, i.e., the switch is up, the 3468A will generate an SRQ (Request Service HP-IL message) whenever the ac power is cycled or test/reset occurs.

Switch 5 is the 50/60 Hz line frequency switch. This switch should be in the up position if a power line with 50Hz frequency is being used, or down if a 60Hz power line is used. This switch changes the integration period (see OPTIMIZING READING RATES) of the A/D converter so as to obtain the greatest NMR and EC-MR rejection at the line frequency used. The reading rate is slightly slower when 50Hz is selected.

Switches 6, 7, at power-on, forces the 3468A into Digital Signature Analysis routines for troubleshooting. Refer to the 3468A Service Manual, -hp- part number 03468-90001. These switches are not accessable from the rear panel.

Switch 8 is the Calibration Enable switch. When placed in the down position, calibration is enabled. This switch should not be enabled by anyone other than qualified service trained personnel. Enabling the CAL switch may cause loss of calibration if proper procedures are not followed.

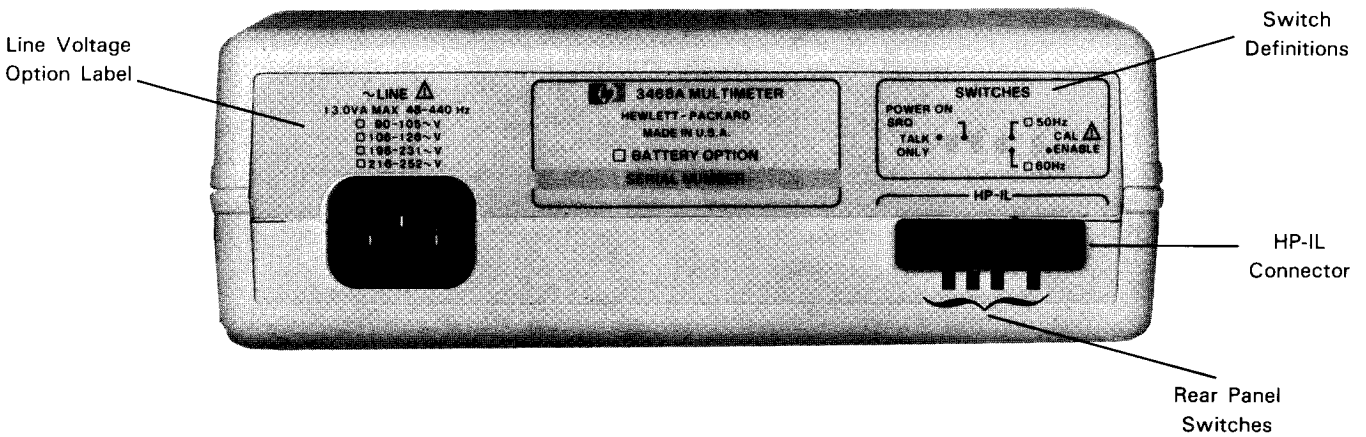

Figure 2-3. 3468A Rear Panel and Switches

Measuring Resistance

The 3468A is capable of measuring resistance from .1 milli-ohm to 30 Megohms in six ranges. Resistance measurements may be made in either 2- or 4-wire ohms configuration. The illustrations in Figure 2-4 show how resistance measurements are made. A known current is supplied by the 3468A and flows through the unknown resistance. The DC voltmeter measures the attendant voltage across the resistor and calculates the resistance. Table 2-5 shows the nominal current through the unknown resistance for the individual ohms ranges. Resistances in excess of 30 Megohms may be measured using the extended ohms mode.

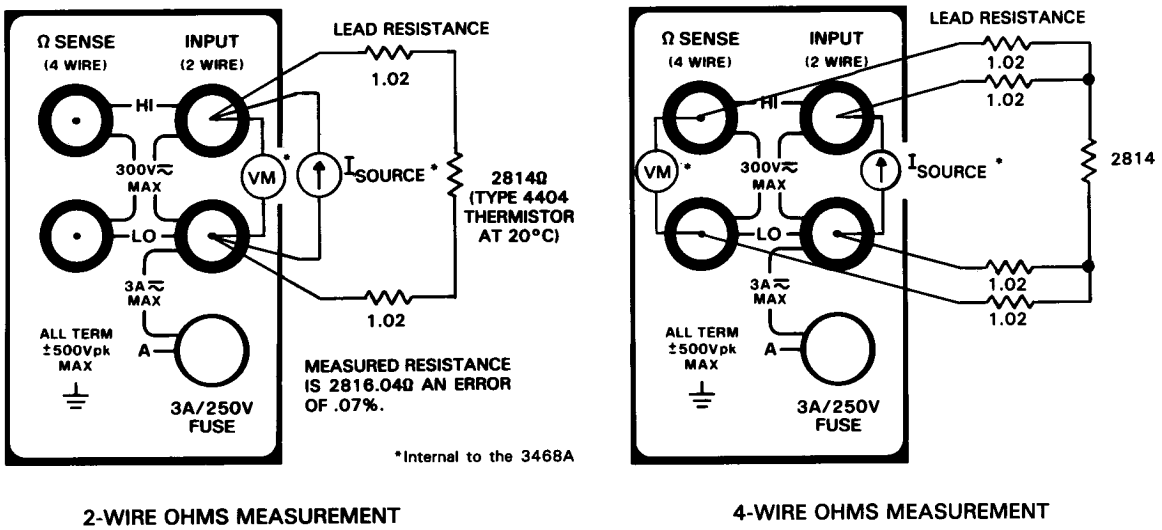

Figure 2-4. Resistance Measurements

Table 2-5. Nominal Currents through Unknown Resistance

Range	Current Through Unknown	Maximum Open Circuit Voltage
300Ω	1mA	6.5 V
3KΩ	1mA	6.5 V
30KΩ	100uA	6.5 V
300KΩ	10uA	6.5 V
3MΩ	1uA	6.5 V
30MΩ	100nA	6.5 V

2-Wire Ohms [2 WIRE Ω]

The two wire ohms mode is used most commonly when the resistance of the test leads is not critical. Inaccurate results may occur when using the 2-wire ohms mode if the resistance of the test leads is very high, i.e., long test leads. Suppose

you are making temperature measurements with a type 44004 thermistor. Refer to Figure 2-4. At 20°C, 40 feet of #24 A.W.G. copper wire has a resistance of 1.02 ohms. Two such wires would have a total resistance of 2.04 ohms. With a type 44004 thermistor this would result in an error of .1%.

Command

F3 Selects 2-wire ohms mode

4-Wire Ohms

The use of 4-wire ohms measurements eliminates the errors caused by the test lead resistance. Figure 2-4 illustrates this point. The current through the thermistor is the same regardless of the lead resistance, and the voltmeter measures only the voltage across the thermistor, not across the combined lead resistance. The 4-wire resistance measurements are essential when highest accuracy is required, or where long lead lengths are present.

Command

F4 Selects 4-wire ohms mode

Extended Ohms

The extended ohms feature of the 3468A is available only via the F7 remote programming command. With extended ohms, the 3468A can be used to measure resistances in excess of 30 Mohms. When in the extended ohms mode, the 3468A goes to the 30 Mohm range, 2-wire mode. An internal resistance of approximately 10 Mohms is placed in parallel with the input terminals by the 3468A. If this resistance is measured first and then your unknown resistor connected to the input terminals; the parallel combination can be measured. A calculation can then be performed to determine the unknown resistance. The formula for the calculation is:

$$Rx = \frac{Ri * Rt}{Ri - Rt}$$

Rx is the unknown resistance, Ri is the measured value of the internal 10 Mohm resistor and Rt is the measured value of the parallel combination. The test leads used for the measurement should be very short, preferably a shielded twisted pair, to redure noise pick up.

Programs to make the necessary measurements, perform the calculations, and display the value of the unknown resistor is given in Chapters III and IV.

Command

F7 Selects the Extended Ohms function (also H7)
(2- wire mode)

Other Considerations

1. There are two situations in which the 3468A may indicate a negative (minus) resistance. One is when small negative voltages exist on the circuit under test. The second is where the inputs to the 4-WIRE SENSE and the input leads are inverted from each other in the 4-wire ohms function.

2. Always use the shortest possible test leads. This is important on the lower ranges to minimize errors due to lead resistance (2-wire ohms mode), and on the higher ranges to minimize noise pick up.

3. Additional settling time may be required when using the higher ohms ranges under program control. This is important if there is more than 200pF shunt capacitance connected externally as might be the case if you were using the 3468A with a scanner. Theoretically, the settling time necessary is:

$$-RC*\ln(P/100)$$

Where R is the resistance being measured, C is equal to 470pF plus any external capacitance, and P is the desired percentage of step accuracy. For example, lets say we want to measure a 3.0 Mohm resistor through a scanner with 1200pF capacitance (High-to-Lo terminals). If a short was previously applied (short to 3.0 Mohms = step) and a .001% reading is desired, the settling time necessary is:

$$-(3*10^{6})*(1200+470)*(10^{-12})*(\ln(.001/100)) = 58mS$$

Since on the 3 Mohm range there is an internal delay of 20mS, an additional delay of 38 to 40 mS should be allowed. The 30 Mohm range has an internal delay of 200 mS.

TEST/RESET

What it Does

The 3468A self test performs several checks on the digital and A/D converter circuitry of the instrument. A failure in any of these four areas is indicated by an error message in the display. When the self test is complete, the 3468A resets to its turn-on state.

Do This

press: TEST/RESET

This initiates the functional tests of the digital circuitry in the 3468A. The SELF TEST starts by turning every segment in the display on (except the top dot on the colon) for about 2 seconds. Following this, a complete power-on SELF TEST is performed. If the test passes, the 3468A returns to its power-on state. If the test fails, an error message appears on the display instead. After the error message is displayed, the 3468A attempts to operate normally. The turn-on state for the 3468A is:

Function:	DC volts
Range:	Autorange on
Display:	5 1/2 digits
Trigger:	Internal trigger
Auto-Zero:	on

Table 2-6. Self Test Error Messages

ERROR 1	–	Calibration RAM error. This may indicate that only certain function and range combinations are not calibrated as indicated by the "CAL" annunciator. However, the 3468A will continue to operate correctly on all other functions and ranges where the CAL annunciator is not lit.
ERROR 2	–	Internal microprocessor RAM error
ERROR 4	–	Internal microprocessor ROM error
ERROR 8	–	A/D Converter error

If more than one error is detected, then "ERROR dd" will appear in the display. The decimal number, dd, represents the summation of the individual error message numbers. For example, ERROR 6 would indicate that errors 2 and 4 were detected.

For all failures refer to the 3468A Service Manual.

TRIGGER MODES

What is Triggering?

Triggering is simply the process that causes the 3468A to take a reading. There are two triggering modes available on the 3468A. These are internal trigger and single trigger. The 3468A can also be triggered remotely from a calculator.

Internal Trigger [INT TRIG]

In the internal trigger mode the 3468A triggers itself to take readings at the maximum possible rate. This mode is automatically selected at instrument turn-on and after performing Self Test. A settling delay has been added before each A/D conversion in ac volts and current and the two highest ohms ranges to ensure accurate readings.

Command

T1 Selects the Internal Trigger Mode

Single Trigger [SGL TRIG]

The single trigger mode allows you to manually trigger the voltmeter from its front panel. The first time you press the Single Trigger key the 3468 will take one reading, display the results, and idle in the single trigger mode. Subsequently, each time the key is pressed the multimeter will make one reading, display the result, and then idle, waiting for another trigger.

This sample and hold feature is useful when you're making measurements in tight areas where the probe must not slip. What you do is this: press the Single Trigger key and position your finger to press the key again. You can then place the probe, press the Single Trigger key, and then remove the probe, all without taking your eyes off of the probe. With the probe safely removed, the measurement is still held on the display.

When the 3468A is in the Single Trigger mode and you change ranges or change function, the left hand portion of the display will go blank (with the exception of the decimal point) until another trigger impulse is received.

Command

T2 Selects the Single Trigger Mode

VOLTAGE MEASUREMENTS

Measuring Voltages

Whether you use your 3468A on the bench or as part of a sophisticated test system, probably most of your measurements will be voltage measurements. If you have special requirements in taking voltage measurements, be sure to read the sections on Optimizing Reading Rates, Display, Autozero, and Triggering modes. A complete Table of Specifications is given in Chapter V of this manual.

DC Voltage Measurements [⎓V]

DC voltages measured on the 3468A are both simple and straightforward. Press the DC Voltage key and either select the appropriate range or allow the multimeter to autorange. Read the display directly (no multiplying the reading by the range, etc.) for the measured voltage.

HP-IL Command

F1 Selects the DC Volts mode

AC Voltage Measurements [~V]

Like DC voltage measurements, AC measurements are very straightforward. Press the AC Voltage key and appropriate range key(s). The display is read directly for the measured voltage.

The 3468A uses a True RMS AC to DC converter for AC voltage and current measurements. Unlike multimeters that use an average detector, the True RMS converter allows accurate measurement of voltages that are often noisy, non-periodic or non-sinusoid. The RMS converter will accurately measure the True RMS value of sawtooth or triangle waveforms; squarewaves; or low repetition rate, high crest factor (ratio of peak to RMS) pulse trains.

RMS measurements are made by calculating the instantaneous square of the input signal, averaging it and taking the square root of the result. This provides a DC voltage that is proportional to the RMS value of the waveform.

HP-IL Command

F2 Selects the AC Volts mode

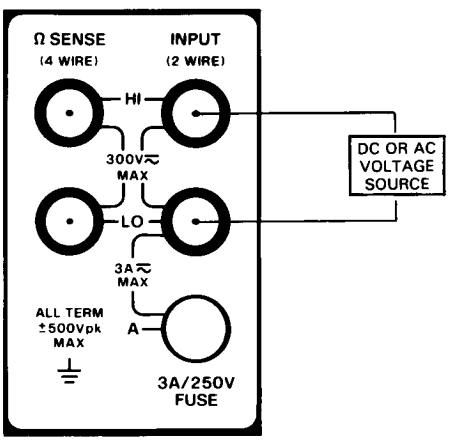

Figure 2-5. Voltage Measurements

Chapter III
Programming With The -hp- Model 41C/41CV

Introduction

Your -hp- Model 3468A Digital Multimeter was designed to interface with a variety of calculators and computers over the Hewlett-Packard Interface Loop (HP-IL). This chapter discusses the programming and remote control of the 3468A from the -hp- Model 41C/41CV family of handheld calculators. The many features of the 3468A combined with the computational power of the 41C/41CV calculator provides for low cost, flexible measurement systems. In addition, printer/plotters and cassette mass storage devices can easily be added to the interface. Chapter IV shows remote programming using a BASIC language computer such as the -hp- Model 85.

This chapter shows you how to execute simple, one line commands from the calculator to control the 3468A, and then read measurement data back. Later we'll discuss interface control operations and the development of powerful programs for controlling the 3468A. Last, you'll look at several application programs including a simple data logger with a printer and cassette drive.

Before beginning this chapter you will want to have read Chapter II of this manual so that you are familiar with the many features of the 3468A. You will also find it helpful to have read the -hp- Model 82160A HP-IL Module Owners Manual (-hp- part number 82160-90001) and the -hp- Model 41C/41CV Owners Handbook and Programming Guide (-hp- part number 00041-90313).

What is HP-IL?

The Hewlett-Packard Interface Loop (HP-IL) is a two wire serial interface that provides programmable control of instruments while being easy to use and understand.The calculator and all devices in the loop, including the 3468A, are connected together in series, forming a continuous loop communications circuit. Any information (instructions or data) that is transferred among HP-IL devices is passed from one device to the next around the loop (one direction only). If the information is not intended for a particular device, that device simply passes the information on to the next device in the loop. When the proper device receives the information, that device responds as directed. In this way, the calculator or the 3468A can send information to and receive information from each device in the loop, according to the device's capability.

What is HP-IL? (Cont'd)

The 3468A may be connected anywhere in the interface loop. The loop consists of up to 30 devices. When installing or removing the 3468A (or any other device) ALWAYS turn off the calculator first. Then simply disconnect the loop in one place and connect the 3468A at that point. Remember, the interface cables must form a continuous loop. All HP-IL connectors are designed to ensure proper orientation and indicate the direction of information transfer.

When the calculator is turned on it will automatically assign addresses to each device depending on its position in the loop. The first device in the loop after the calculator (in the direction of information flow) will have an address of "1". The second device will have an address of "2", and so on around the loop. The calculator has an address of "0". The device must be "SELECTED" by its address before any command or information can be sent to it.

For more specific information on HP-IL, refer to Appendix A in this manual and also the -hp- Model 82160A HP-IL Module Owners Manual (-hp- part number 82160-90001).

Examples Format

The many examples in this chapter are designed to enhance your understanding of programming using the HP-IL interface. The examples show the actual keystrokes used in entering a command or program line from the -hp- Model 41C/41CV calculator keyboard. Also shown is the calculator display for each line as it has been entered. Enter the examples exactly as shown. If you make a mistake when entering a program you can generally use the correction key [←], the Back Step key [BST], or the Single Step key [SST] to edit the program. For more complete -hp- Model 41C/41CV operating and programming information refer to the Owner's Handbook and Programming Guide for the -hp- Model 41C/41CV.

Do This

Connect only the 3468A in the interface loop to the 41C/41CV calculator. Turn on only the 3468A.

Press: ADRS

The 3468A display will indicate its default address of 22.

Now, turn the 41C/41CV calculator on and again press the following keys on the 3468A:

ADRS

The calculator readdressed the 3468A and since it is the only device in the loop it was given address 1. This feature of HP-IL is called Autoaddressing.

Execute the following instruction from the 41C/41CV calculator:

[XEQ] [ALPHA] REMOTE [ALPHA]

Note the RMT annunciator on the 3468A display. This indicates that the 3468A is in the remote mode and ready to receive instructions from the calculator.

Sending Instructions to the 3468A

With the 3468A in the remote mode and the only device in the loop, we can start sending commands or instructions to it. Let's try a very simple command; display your name, or any message up to 12 characters long, in the 3468A display. Key in the example below, replacing "YOUR NAME" with your own name or other message.

Keystrokes	Display
[ALPHA] [←] D2YOUR NAME [ALPHA]	D2YOUR NAME
[XEQ] [ALPHA] OUTA [ALPHA]	XEQ OUTA

The message "YOUR NAME" should appear on the 3468A display. The LSTN (Listen) annunciator appeared momentarily to indicate that the 3468A was listening to the calculator.

Sending Instructions to the 3468A (Cont'd)

Let's take a close look at what we did. First, the Alpha register in the calculator was cleared with the correction key (left arrow) and then, the message "D2YOUR NAME" was put into the Alpha register. D2 is called the command code and tells the 3468A that the message following it is to be displayed. Second, the command OUTA (OUTput Alpha register) was executed (XEQ). Since the 3468A was the selected device, it received the instruction.

There are several command codes that the 3468A recognizes and responds to. The blue page at the end of this chapter shows the command codes, what they mean and valid combinations of Function and Range codes. A list of command codes is also located on the underside of the 3468A. Command codes may be combined to form a string of commands so that all are sent at one time.

For example, to take the 3468A out of the display message mode, send the command D1 (Display 1). After displaying a message, if D1 is not sent, the 3468A continues to display the message sent to it. The command code for the 2-wire ohms mode is F3 (Function 3). To set the 3468A to the 2-wire ohms mode, load the calculator Alpha register with the code F3 and execute the OUTA instruction. To set the multimeter to the 3 Kohm range use the command R2. The three commands can be combined in the alpha register and sent to the 3468A:

[ALPHA] F3R2 [ALPHA]
[XEQ] [ALPHA] OUTA [ALPHA]

Sample Problem

Suppose you need to make an ac voltage measurement that is known to be between .20 volts and 1.0 volt. You also want the Autozero feature on and the measurement to be made in the 4 1/2 digit mode. What series of instructions will accomplish this?

First, it is an ac voltage measurement, therefore use code F2. You don't know whether to use the 300mV range or the 3 Volt range, so use Autorange, command RA. The instruction for autozero on is Z1, and for the 4 1/2 digit mode, N4. The command string now looks like:

"F2 RA Z1 N4"

Since you know the voltage to be measured is small, set the 3468A to a low range before it autoranges. The command R1 will do this. Furthermore, if you want the meter to take only one reading, add the instruction T2 to the end of the string. By adding it at the end, the meter is setup for the measurement before being triggered. The complete string now looks like this:

"F2 R1 RA Z1 N4 T2"

Sending Instructions to the 3468A (Cont'd)

Instructions are implemented as they are received over the loop interface. In other words, the 3468A will be set to the ac volts function before it is set to the lowest range. It will be set to the lowest range before autoranging, etc.

The complete string is sent to the 3468A by loading the string into the Alpha register and executing the command OUTA:

[ALPHA] F2R1RA21N4T2 [ALPHA]

[XEQ] [ALPHA] OUTA [ALPHA]

Programming Hints

When more than one command is sent to the 3468A in one string, the commands are executed as they arrive. Therefore, it is best to make the trigger statement the last statement in the string. In this way, the 3468A will be set up for the measurement, before the the multimeter is triggered. If you send the command "F2F3", the F3 command is the last one received and will be in effect.

Instructions sent to the 3468A are in the form of 7-bit ASCII characters. All lower case letters, spaces, commas, semicolons and Carriage Return, Line Feed (CR, LF) are ignored. They may be used to format commands for easy readability. All null characters, Form Feed, and tab characters result in a syntax error (see INSTAT command, Status Register). All other characters and sequences not explicitly allowed (see the Command Codes) will also result in a syntax error. For example:

"F 2 Ra 3" is the same as "F2R3"

When a multicharacter command is received, if a character is received which does not fit into the syntax of a command, the command will be aborted and a syntax error generated. An attempt is made by the 3468A to process the character as if it were the first character of another command. For example, the command "FR3" will cause a syntax error (because the 3468A does not recognize FR) but will then go to range 3, i.e.,R3.

Commands that require arguments, such as the D2 command, are exceptions to the above rules. Any ASCII character may be sent as part of the D2 text message. Note, however, that the 3468A display recognizes only the lower six bits of the ASCII code, see Appendix B.

Receiving Data From the 3468A

Not only can the 3468A be controlled by the -hp- Model 41C/41CV calculator, but it can also talk to the calculator. The calculator can then process the measurement data or status information as necessary.

From the last section we saw how to program the 3468A to take one ac voltage reading on the 300mV range. Now let's see how to transfer the measurement from the 3468A to the calculator.

Keystrokes	Display
[XEQ] [ALPHA] IND [ALPHA]	XEQ IND

That is all there is to it. The measurement will appear in the calculator's display as well as in the X-register. Since the reading is in the X-register it is ready to be operated on by the calculator. You could take the log of the reading by pressing the LOG key for example. IND (INput Decimal) is an instruction that causes the 3468A to talk (TLK annunciator) to the calculator, giving it the measurement data.

If you look closely at what we have done, we have actually written a very simple program. The program instructs the 3468A to take a particular type of measurement and send the measurement results to the calculator. Later, you'll learn to complete the program by adding a label and an END or return statement. Look at the listing below and compare it to the instructions previously executed.

```
01♦LBL "ACVOLTS"
02 "F2R1RAZ1N4T2"
03 OUTA
04 IND
05 END
```

HP-IL Interface Control

Before pursuing further the subject of program writing, let's look at some special HP-IL commands. In the examples we've looked at so far, commands like IND, OUTA, or REMOTE were used. These commands are called Interface Control Operations. Now you'll learn what these and other operations mean and how they are used. The control operations allow you to directly specify a device to perform a function, send or receive information, or control the interface loop. These control operations also allow more than one 3468A to be used in the loop along with almost any other HP-IL device.

HP-IL Interface Control (Cont'd)

Talk Only Mode

Many applications of the 3468A, such as a simple data logger, may require that the multimeter take readings and output them to some device such as a printer. All this is to be done without the aid of a controller. The 3468A's Talk Only mode allows just that type of transaction to occur.

Connect the 3468A to an -hp- Model 82162A Thermal Printer with two HP-IL cables. Remember, the 41C/41Cv is not to be connected in the loop. The 3468A is set to the Talk Only mode by setting switch number 1, on the rear panel, to the up position. The 82162A printer is set to the Listen Only mode by holding both PRINT and PAPER ADVANCE keys down while turning the printer on.

Measurement data is sent by the multimeter to the printer after each completed reading. Function and range settings, autozero, etc., are set from the front panel of the 3468A. The multimeter can be put in the single trigger mode and will output readings only when triggered.

Interface Control Operations

The eleven Interface Control Operations are listed below with a brief definition of each. Next, we'll take a look at each of the operations and see what they do and how they are used. You may also want to read the -hp- Model 82160A HP-IL Module Owner's Manual.

OUTA	Output the Alpha register to the selected device
IND	Input decimal number from selected device
REMOTE	Set the selected device to the Remote mode
LISTEN	Set selected instrument to listen or remove all listeners
LOCAL	Set selected device to the Local mode
TRIGGER	Trigger all devices set to respond
INSTAT	Input Status information from the selected device
SELECT	Select a particular device or instrument
FINDID	Find address of specified device
MANIO	Set the interface to the Manual mode
AUTOIO	Set the HP-IL interface to the Auto mode

OUTA

Example

[ALPHA] F2R3Z1N4 [ALPHA]

[XEQ] [ALPHA] OUTA [ALPHA]

Comments

OUTA (OUTput Alpha register) causes the contents of the Alpha register to be output to the selected device. In the example shown above, the Alpha register is loaded with the command string: F2R3Z1N4.

When OUTA is executed (3468A is selected), the multimeter will be set to the ac volts function (F2), 30 volt range (R3), autozero on (Z1), and 4 1/2 digit display mode (N4).

Normally, the OUTA command is terminated with a Carriage Return (CR), Line Feed (LF). The 3468A, however, ignores these characters.

IND

Example

[XEQ] [ALPHA] IND [ALPHA]

Comments

The IND (INput Decimal) command retrieves an ASCII-coded numeric value from the "SELECTED" device and places it into the X-register of the calculator. When this command is executed and the 3468A is the selected device, the 3468A becomes a talker and outputs one measurement value of 13 bytes in the form:

+/-d.dddddE+/-d CR LF

where "d" represents a single digit, CR is Carriage Return, and LF is Line Feed. If the 3468A is in the 4 1/2 digit display mode, the last digit returned before the E will be a 0. In the 3 1/2 digit mode, the last two digits will be 0's. CR LF is a standard end-of-line indicator and does not show in the display.

Overload conditions are sent through the loop as:

+9.99999E+9 CR LF

REMOTE

Example

XEQ ALPHA REMOTE ALPHA

Comments

The REMOTE command is used to cause the 3468A to switch from local front panel control to remote program control. For the 3468A, the REMOTE mode means that the front panel keyboard (except the SRQ and LOCAL keys) is disabled. The RMT annunciator in the display turns on. The 3468A remains in the same state after receiving the REMOTE command that it was in before receiving it. See also - LOCAL.

LISTEN

Example

XEQ ALPHA LISTEN ALPHA

Comments

The LISTEN function makes a specified device a listener - that is, the device is enabled to receive information. The number in the X-register of the calculator is the address of the specified device and should be a number between 1 and 30. However, if the number in the X-register is 31 when the LISTEN command is executed, all devices in the loop are removed from the listener mode.

The utility of this instruction is that more than one listener can be set up by executing the listen command for each device. For example, suppose we have four 3468A's in the loop. We need to trigger them simultaneously. By using the LISTEN command all four can be made listeners. When the TRIGGER command is executed, the 3468A's are triggered almost simultaneously. The alternative is to select each device and trigger them individually.

LOCAL

Example

XEQ ALPHA LOCAL ALPHA

Comments

The LOCAL command clears the 3468A from the REMOTE operation mode and restores front panel keyboard control. Pressing the 3468A LOCAL key accomplishes the same thing. See also - REMOTE.

TRIGGER

Example

XEQ ALPHA TRIGGER ALPHA

Comments

If the 3468A is in the listener mode or is the selected device, the TRIGGER message will cause the multimeter to trigger for a new reading. If a reading is in progress when the TRIGGER command is received, the reading will be aborted and a new reading started.

INSTAT

Example

XEQ ALPHA INSTAT ALPHA

Comments

The INSTAT (INput STATus) function causes the 3468A (or selected device) to output its eight bit Status Byte. A decimal value is placed into the X-register of the calculator. This value is the sum of the values of the bits that are set, within the lower six bits. The entire eight bits are also transferred to user Flags 00 through 07 in the calculator, with status byte bit 0 placed in Flag 00, bit 1 to Flag 01, etc. This allows testing of individual bits (Flags).

Status Register

The Status Register in the 3468A is used to continuously monitor seven conditions within the multimeter. The figure below illustrates the Status Register and defines each bit. The bits are set when the indicated condition occurs and will be cleared when the INSTAT message is sent to the 3468A, except as noted.

Status Byte

The Status Byte is an eight bit byte that may be used to determine the current status of the 3468A. The Status Byte is output from the Status Register in response to the INSTAT command.

	Bit 7	Bit 6	Bit 5	Bit 4	Bit 3	Bit 2	Bit 1	Bit 0
	Power-on Reset	RQS	Cal Error	Front Panel SRQ	Hardware Error	Syntax Error	Invalid Range Function	Data Ready
Value:	128	64	32	16	8	4	2	1

Bit 7 of the register will be set only if switch 3 (rear panel of the 3468A) is set to the "UP" position and a power-on reset occurs. It is cleared when the INSTAT message is sent to the 3468A.

Bit 6 of the Register will be set (a "1") when the 3468A SRQ Mask has been set for certain bits, specified by bits 0 through 5, and when those conditions occur. The purpose of bit 6 is that, when set, the 3468A can interrupt the controller. However, the -hp- Model 41C/41CV does not respond to an SRQ (Service Request) interrupt. Therefore, the SRQ Mask and bit 6 are discussed in the next chapter where BASIC language controllers such as the -hp- Model 85 are discussed. Bit 6 is cleared when the condition for requesting service no longer exists.

Bit 5 will be true when an attempted calibration failed. The bit is cleared when INSTAT is executed.

Bit 4 is true when the 3468A front panel SRQ key is pressed. The bit is cleared when INSTAT is executed.

Bit 3 is true when a hardware error is detected such as from the self test. It is cleared when the Binary Status is read, see the B1 command code.

Bit 2 will be true when an invalid command is sent to the 3468A. It is cleared when INSTAT is executed.

Bit 1 is true if an invalid combination of function and range codes are sent to the 3468A, e.g., F2R5. It is cleared when a valid range and function combination is selected.

Bit 0 is cleared when the reading is read, a program command is executed that changes the state of the A/D converter, or a Trigger command is received.

The Status Byte together with the Service Request (SRQ) Mask determine when the Require Service (RQS) bit is to be set. Setting RQS causes SRQ to be sent on the HP-IL. Execution of the INSTAT command for the 3468A will clear SRQ and it will remain clear until another reason for setting RQS occurs. RQS on the other hand, is set if one or more corresponding bits in the Status Byte and SRQ Mask are both set. RQS is cleared whenever all corresponding bits are not both set. INSTAT then, may cause RQS to be cleared but not in all cases. Bits 2, 4, 5, and 7 are cleared with INSTAT.

Let's look at three short examples of how the INSTAT command can be used. The first two examples will be used later in a Statistics program.

Example 1. Data Ready

The data ready bit (bit 0 in the Status register) of the 3468A, allows the calculator to determine when new measurement data is ready. Since the data ready bit is bit 0, it will be placed into the calculator's Flag 00 when the INSTAT command is executed. Therefore, Flag 00 will be the flag tested to see if data is ready. Before keying in the following example, make certain that the 3468A is in the Single Trigger mode.

Keystrokes	HP 41 Display	Comments
[XEQ] [ALPHA] INSTAT [ALPHA]	1.0000	Bit 0 is set indicating Data Ready. The value of this bit is "1".
■ [FS?] 00	YES	The test to see if Flag 00 is set returns a YES answer
[XEQ] [ALPHA] IND [ALPHA]		The display will show the 3468A reading.
[XEQ] [ALPHA] INSTAT [ALPHA]	0.0000	The data is no longer available. It was read into the calculator. Bit 0 is cleared and INSTAT returns a "0".
■ [FS?] 00	NO	The Flag test now shows that bit 0 in the status register is clear.

When the 3468A was placed in the Single Trigger mode, it took one reading and stored it internally. When the first INSTAT command was executed, the calculator display showed a "1". This is because bit 0 of the 3468A Status Register was set due to the measurement data being ready. When Flag 00 was tested (FS? 00) it was set and the calculator displayed "YES".

With the IND command, the measurement data was sent to the calculator and, since the 3468A was in the Single Trigger mode, no new measurements were taken. Therefore, no new data became available and bit 0 in the Status Register is clear. This is evident by the second INSTAT command returning a "0" and the test for Flag 00 being "NO".

The FS? or FC? tests may be used in programs to branch to subroutines if data is or is not ready.

Example 2. Front Panel SRQ

The front Panel SRQ key on the 3468A can be used to signal the calculator to, for example, begin a data manipulation subroutine. As in the previous example, we'll use the INSTAT and Flag test commands, except that we will test Flag 04. Flag 04 represents bit 4 in the Status Register. Before beginning this example, make sure that the 3468A is set to the internal trigger mode.

Keystrokes	HP 41 Display	Comments
[XEQ] [ALPHA] INSTAT [ALPHA]	1.0000	As in the previous example this indicates Data Ready.
■ [FS?] 04	NO	Flag 04 (bit 4) is not set.
Now, press the 3468A front panel SRQ key.		
[XEQ] [ALPHA] INSTAT [ALPHA]	17.0000	The display shows 17 for bits 4 (value 16) and 1 (value 1).
■ [FS?] 04	YES	Flag 04 (bit 4) is set because the SRQ key was pressed.

After the 3468A front panel SRQ key was pressed, bit 4 in the Status Register was set. Consequently, when the INSTAT command was executed, Flag 04 was set. The SRQ annunciator did not come on and the SRQ message was not sent because the SRQ mask was not set for this bit.

Example 3. Power-on SRQ

This example shows how the power-on SRQ feature can be used with the -hp-Model 41C/41CV calculator. The Power-on SRQ bit is used to signal the calculator that a power outage has occurred for the 3468A.

Without turning the 3468A off, locate the bank of switches just below the HP-IL connector, on the rear panel of the multimeter. Set switch 3 to the "UP" position. Again, execute the INSTAT command.

Keystrokes	HP 41 Display	Comments
XEQ ALPHA INSTAT ALPHA	1.0000	The calculator display shows "1" for data ready.
■ FS? 07	NO	Flag 07 (bit 7) is not set.
Now, turn the 3468A off and then on again. Notice the SRQ annunciator in the display.		
XEQ ALPHA INSTAT ALPHA	1.0000	Data is still ready.
■ FS? 07	YES	Flag 07 is set (bit 7) because a power-on reset occurred.

Return switch 3 to its "DOWN" position.

SELECT

Example

XEQ ALPHA SELECT ALPHA

Comments

The SELECT command is used to determine which HP-IL device will be the selected device in the loop - that is, which device will receive the information. The X-register in the calculator must contain the address of the device to be selected before SELECT is executed.

FINDID

Example

[ALPHA] HP3468A [ALPHA]
[XEQ] [ALPHA] FINDID [ALPHA]

Comments

The FINDID (FIND IDentity) function searches for a device with a specific identity and determines the address of that device. The device identity is placed in the Alpha register of the calculator before FINDID is executed. For the 3468A the identity is: HP3468A. The decimal address of the device is returned to the X-register of the calculator.

In the Auto mode, the interface searches the entire loop starting at the "SELECTED" device. In the Manual mode, the interface checks only the "SELECTED" device.

What happens when there are two or more 3468A's in the loop? If the interface is in the Auto mode when FINDID is executed, the address of the first 3468A is returned and the search ends. If we then "SELECT" the device (see SELECT) after the first 3468A and execute FINDID again, it will return the address of the second 3468A. In this manner, by selecting the device after the 3468A, we can find the address of the next 3468A with FINDID.

MANIO

Example

[XEQ] [ALPHA] MANIO [ALPHA]

Comments

The MANIO (MANual I/O) function sets the interface to the manual mode (sets Flag 32 in the calculator). This means that devices such as printers and mass storage cassette drives must be manually selected. See also - AUTOIO.

Example

[XEQ] [ALPHA] AUTOIO [ALPHA]

Comments

The 82160A interface module for the calculator controls the interface loop according to the modules operating mode - either Auto or Manual (see MANIO). The Auto mode is the easier mode to use with all HP-IL devices including the 3468A. This is especially true if you have one printer and/or one mass storage device in the loop.

In the Auto mode, when you execute a printer or mass storage operation, the interface automatically searches through the loop for the proper device to carry out the instruction. Hence the name AUTOIO. For example, if you execute the PRA (PRint Alpha register) function when the 3468A is selected, the printer in the loop automatically performs the operation. In the Manual mode, the printer would have to be "SELECTED" before the PRA function is executed.

Writing Programs

Earlier in this chapter we looked at a simple ac voltage measurement problem and developed a simple -hp- Model 41C/41CV program. That program illustrates the essentials of programming: 1, a Label; 2, setting up the 3468A for a particular measurement(s); 3, triggering the multimeter; and 4, inputting the results. Of course, the program must also have an END statement. For more specific information on programming, refer to the Owner's Handbook and Programming Guide for the -hp- Model 41C/41CV.

Let's look at the sample problem again:

```
01♦LBL "ACVOLTS"
02 "F2R1RAZ1N4T2"
03 OUTA
04 IND
05 END
```

Line 01 is a title or "LABEL" for the program. Labels are used to identify a program or subroutine. To run the program execute the "Label", i.e.,

[XEQ] [ALPHA] ACVOLTS [ALPHA]

The second line sets up a string of commands which is sent to the 3468A by the OUTA command of line 03. Line 04 is used to input the measured ac voltage to the calculator; line 05 ends the program.

Programs such as this are very easy to write if the 3468A is the only device in the loop with the calculator. Often times, however, you'll want to include a printer/plotter and a mass storage cassette drive along with the 3468A. In such instances, the calculator interface module should be initialized and the 3468A selected and put in the remote mode.

Initialization

The following program locates the 3468A in the loop (finds its address), selects it to receive information, and puts the 3468A into the REMOTE mode. This program should be executed before any other command or program is executed. This initialization program need only be executed once unless a device is turned off or the loop is broken to insert or remove a device. The 82160A HP-IL module must be inserted in the calculator before entering the program.

Initialization Program

Keystrokes	Display	Listing
PRGM		
■ GTO . .		
■ LBL ALPHA INI68 ALPHA	01 LBL"INI68	01*LBL "INI68"
XEQ ALPHA AUTOIO ALPHA	02 AUTOIO	02 AUTOIO
■ CF 17	03 CF17	03 CF 17
ALPHA HP3468A ALPHA	04 "HP3468A	04 "HP3468A"
XEQ ALPHA FINDID ALPHA	05 FINDID	05 FINDID
XEQ ALPHA SELECT ALPHA	06 SELECT	06 SELECT
XEQ ALPHA REMOTE ALPHA	07 REMOTE	07 REMOTE
■ RTN	08 RTN	08 RTN
PRGM		09 .END.

The initialization program has now been entered. If you have not yet connected your 3468A into the loop, do so now. Remember to turn your calculator off before connecting the 3468A. The initialization program will not be lost in the calculator with power turned off.

Initialization (Cont'd)

Running the Program

To run the initialization program, press:

[XEQ] [ALPHA] INI68 [ALPHA]

The calculator display will return with the HP-IL address of the 3468A. In addition, the RMT (REMOTE) annunciator will turn on to indicate that the 3468A is ready to accept commands from the calculator. Let's go one step further and assign this program to the calculator Σ+ key. This will make execution of the program easier in the future.

[■] [ASN] [ALPHA] INI68 [ALPHA] [Σ+]

Now, when you need to execute the initialization program, put the calculator in the USER mode and press the Σ+ key.

INI68

HEWLETT PACKARD
3468A PROGRAM

PROGRAM REGISTERS NEEDED: 5

ROW 1 (1 : 3)

ROW 2 (4 : 7)

ROW 3 (7 : 9)

GTO [.] [.]

Building Block Programming

One approach to program writing uses "Building Block" subprograms to simplify programs. With this approach, you write a mainline program that uses subprograms that already exist. The following program provides seven measurement subprograms and an eighth subprogram that sets-up the 3468A for the measurement, triggers the multimeter, and reads the measurement data to the calculator. The seven measurement subprograms are used to specify the type of measurement to be made and then branch to the eighth subprogram.

Do not erase the INI68 program before loading the building block program. This is done by executing the following command before any other program is entered:

■ GTO ⊡ ⊡

```
01♦LBL "BLOCKS"
02♦LBL "MVDC"
03 "F1"
04 GTO 00
05♦LBL "MVAC"
06 "F2"
07 GTO 00
08♦LBL "M2OHM"
09 "F3"
10 GTO 00
11♦LBL "M4OHM"
12 "F4"
13 GTO 00
14♦LBL "MADC"
15 "F5"
16 GTO 00
17♦LBL "MAAC"
18 "F6"
19 GTO 00
20♦LBL "MXOHM"
21 "F7"
22♦LBL 00
23 "HRAZIN4T2"
24 OUTA
25 IND
26 RTN
27 .END.
```

Measure Volts DC

Measure Volts AC

Measure 2-Wire Ohms

Measure 4-Wire Ohms

Measure Amps DC

Measure Amps AC

Measure Extended Ohms

Label 00. Autorange, Auto-zero on, 4½ Digit Display, Single Trigger, Inputs one reading.

The subprograms, by label and function are:

LABEL	FUNCTION
MVDC	Measure Volts DC. MVDC, along with subprogram 00, sets the 3468A to take one dc voltage measurement.
MVAC	Measure Volts AC. MVAC, along with subprogram 00, sets the 3468A to take one ac voltage measurement.
M2OHM	Measure 2-wire ohms. M2OHM, along with subprogram 00, sets the 3468A to take one, 2-wire resistance measurement.
M4OHM	Measure 4-wire ohms. M4OHM, along with subprogram 00, sets the 3468A to take one, 4-wire resistance measurement.
MADC	Measure Amps DC. MADC, along with subprogram 00 to set the 3468A to take one dc amps measurement.
MAAC	Measure Amps AC. MAAC, along with subprogram 00 to set the 3468A to take one ac amps measurement.
MXOHM	Measure Extended ohms. MXOHM uses subprogram 00 to set the 3468A to take one, Extended ohms measurement. See later example.

Building Block Programming (Cont'd)

The sample program that was used earlier to measure ac volts can now be reduced to three lines:

```
01 LBL TACVOLTS
02 XEQ TMVAC
03 END
```

Although the reduction from five lines to three lines does not seem significant in this example, the next three programs show how these building block subprograms may be used to simplify programming.

BLOCKS

HEWLETT PACKARD
3468A PROGRAM

PROGRAM REGISTERS NEEDED: 18

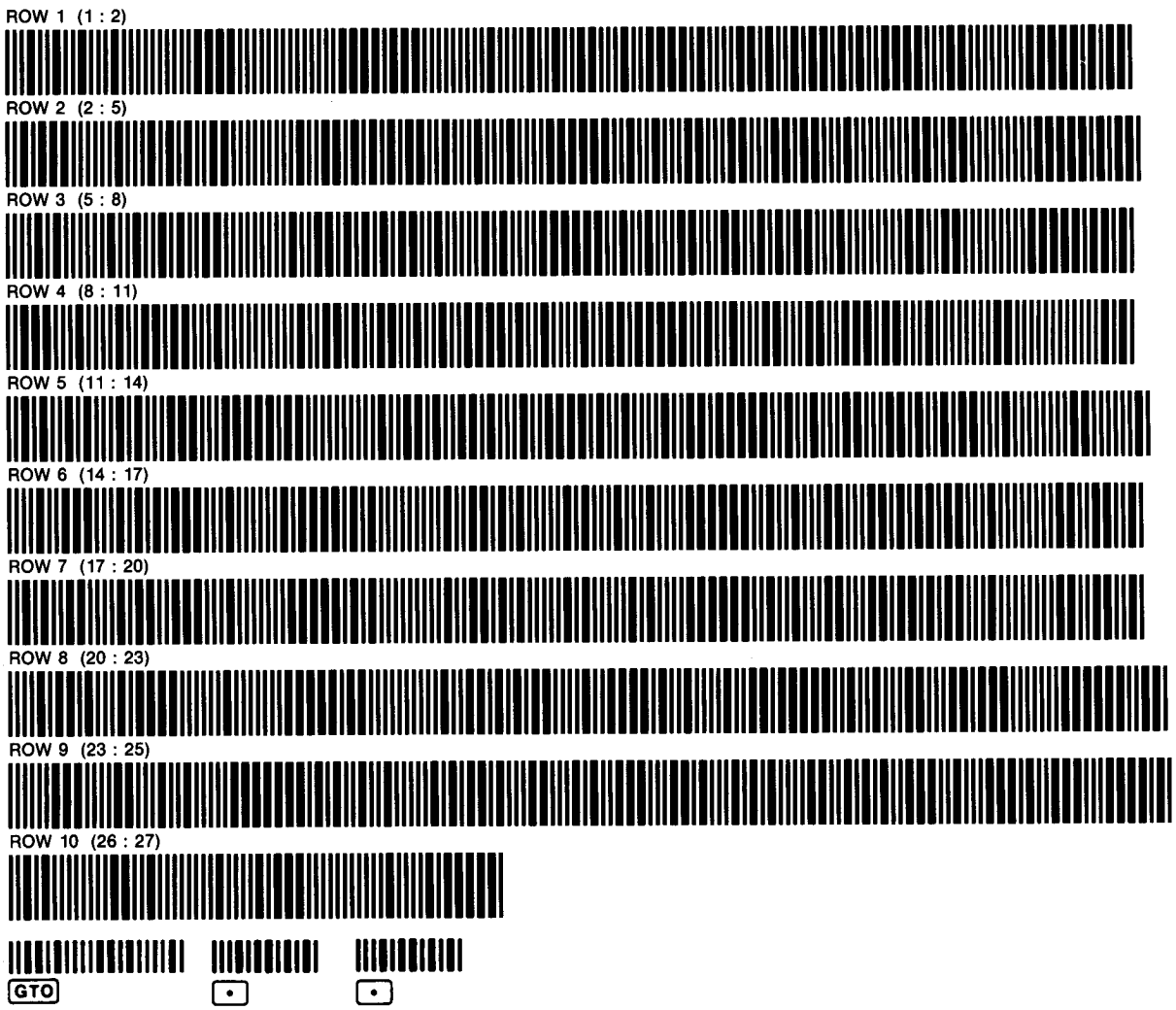

EXTENDED OHMS

The extended ohms feature of the 3468A is available only via the F7 remote programming command. With extended ohms, the 3468A can be used to measure resistances in excess of 30 Mohms. When in the extended ohms mode, the 3468A goes to the 30 Mohm range, 2-wire mode. An internal resistance of approximately 10 Mohms is placed in parallel (internally) with the input terminals. If this resistance is measured first and then your unknown resistor connected to the input terminals; the parallel combination can be measured. A calculation can then be performed to to determine the approximate value of the unknown resistance. The formula for the calculation is:

$$Rx = \frac{Ri * Rt}{Ri - Rt}$$

Rx is the unknown resistance, Ri is the measured value of the internal 10 Mohm resistor and Rt is the measured value of the parallel combination. The test leads used should be very short, preferably a shielded twisted pair, to minimize noise pick up.

A program to make the necessary measurements, perform the calculations, and display the value of the unknown resistor is given below. Follow the instructions displayed on the -hp- Model 41C/41CV. First it will indicate: OPEN TERMS. This means to remove the test leads from the 3468A. When the message - APPLY RESIST. - appears, connect the unknown resistance to the 3468A. The value of that resistance will be displayed on the calculator. Notice the use of MXOHM subprogram in lines 05 and 11.

```
                        Label - Display Extended
01♦LBL "DXOHM"          Ohms
02 XEQ "INI68"          Execute initialization program
03 "OPEN TERMS."  ⎫
04 PROMPT         ⎪     Measure internal 10 Mohm
05 XEQ "MXOHM"    ⎪     resistor, use MXOHM from
06 1/X            ⎪     BLOCKS program
07 STO 00         ⎭     Store inverted value in Reg.
                        00
08 "APPLY RESIST. ⎫
09 PROMPT         ⎪     Measure parallel resistor
10♦LBL 01         ⎪     combination
11 XEQ "MXOHM"    ⎭     Use MXOHM from BLOCKS
                        program
12 X<=0?          ⎫
13 GTO 02         ⎪
14 1/X            ⎪     Calculate value of unknown
15 RCL 00         ⎪     resistor
16 -              ⎪
17 X<=0?          ⎭
18 GTO 00         ⎫
19 1/X            ⎪
20 1 E6           ⎪
21 /              ⎪     Calculate value of unknown
22♦LBL 02         ⎪     resistor
23 FIX 2          ⎪
24 RND            ⎭
25 CLA            ⎫
26 ARCL X         ⎪
27 "⊢ MOHM"       ⎪     Display value of resistor
28 AVIEW          ⎪
29 GTO 01         ⎭
30♦LBL 00         ⎫
31 "OVERLOAD"     ⎪     Display if overload
32 AVIEW          ⎪
33 GTO 01         ⎭
34 .END.
```

EXTENDED OHMS (Cont'd)

DXOHM

HEWLETT PACKARD
3468A PROGRAM

PROGRAM REGISTERS NEEDED: 16

ROW 1 (1 : 2)

ROW 2 (2 : 3)

ROW 3 (3 : 8)

ROW 4 (8 : 8)

ROW 5 (9 : 14)

ROW 6 (15 : 23)

ROW 7 (24 : 29)

ROW 8 (29 : 33)

ROW 9 (33 : 34)

GTO

dBm MEASUREMENTS

The dBm program is used to calculate a power ratio using a 50 ohm impedance as the reference. The dBm equation is:

$$dBm = 10 * LOG((X^2/R)/1mW)$$

where X is the measured value, R is the reference impedance (50 ohms) and 1mW is the 0dBm reference.

The dBm value is displayed on both the 3468A display and the -hp- Model 41C/41CV. Notice the use of subprogram MVAC in line 04.

```
01♦LBL "DBM"      Label dBm Measurements
02 XEQ "INI68"    Execute initialization program
03♦LBL 00
04 XEQ "MVAC"     Execute MVAC from BLOCKS program
05 X↑2
06 50
07 /
08 1 E-3
09 /              Calculate dBm
10 LOG
11 10
12 *
13 FIX 2
14 RND
15 "D2"
16 ARCL X
17 "├ DBM"        Display dBm on 3468A
18 OUTA
19 CLA
20 ARCL X
21 "├ dBM"        Display dBm on calculator
22 AVIEW
23 GTO 00
24 .END.
```

DBM

HEWLETT PACKARD
3468A PROGRAM

PROGRAM REGISTERS NEEDED: 10

ROW 1 (1 : 2)

ROW 2 (2 : 8)

ROW 3 (8 : 15)

ROW 4 (15 : 20)

ROW 5 (20 : 24)

GTO . .

TEMPERATURE MEASUREMENTS

The TEMP program computes the temperature, in °C, corresponding to the resistance of a thermistor. The program has been designed to work with thermistors exhibiting a 5.0000 Kohm resistance at 25°C such as a type 44007 (-hp-part number 0837-0164) or equivalent.

The program was written for 2-wire resistance measurements which provides accurate results if the thermistor is used at a temperature where its resistance is much greater than the resistance of the test leads. For greatest accuracy from a thermistor, 4-wire resistance should be made. To change from the 2-wire mode to 4-wire mode, change line 15 to read XEQ "M4OHM". This program is useful over a range of −80°C to +150°C.

```
01♦LBL "TEMP"      Label Temperature measurements
02 -6.760961227
03 STO 01
04 5314.3107
05 STO 02          Conversion coefficients for
06 322.807684      resistances above 3134
07 STO 03          ohms (36°C)
08 -5.952179428
09 STO 11
10 4751.384293
11 STO 12          Conversion coefficients for
12 303.33182       resistances equal to or less
13 STO 13          than 3134 ohms (36°C)
14 XEQ "INI68"     Execute Initialization program
15 XEQ "M2OHM"     Execute measure 2-wire
                   ohms from BLOCKS program
16♦LBL "MEAS"
17 3134
18 ENTER↑
19 TRIGGER         Tests for resistance above
20 IND             3134 ohms (36°C)
21 STO 00
22 X>Y?
23 GTO 35
24 RCL 13
25 RCL 12          Get coefficients for
26 RCL 11          temperatures 36° and above
27 GTO 36
28♦LBL 35
29 RCL 03
30 RCL 02          Get coefficients for
31 RCL 01          temperatures below 36°
32♦LBL 36
33 RCL 00
34 LN
35 X<>Y
36 -               Resistance to temperature
37 /               conversion
38 X<>Y
39 -
40 STO 00
41 FIX 2
42 "D2"
43 RCL 00
44 ARCL X          Display temperature
45 "┣ DEG C"
46 OUTA
47 GTO "MEAS"
48 .END.
```

TEMPERATURE MEASUREMENTS (Cont'd)

TEMP

HEWLETT PACKARD
3468A PROGRAM

PROGRAM REGISTERS NEEDED: 23

ROW 1 (1 : 2)

ROW 2 (2 : 4)

ROW 3 (4 : 6)

ROW 4 (6 : 8)

ROW 5 (8 : 10)

ROW 6 (10 : 14)

ROW 7 (14 : 15)

ROW 8 (16 : 18)

ROW 9 (19 : 27)

ROW 10 (27 : 36)

ROW 11 (37 : 45)

ROW 12 (45 : 47)

ROW 13 (47 : 48)

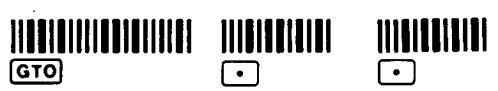

GTO • •

STATISTICS

The STATS program computes four statistical values for a set of measurements made by the 3468A. The four values; Mean, Standard Deviation, Minimum value, and Maximum value, are displayed on the 3468A's display for easy readability. An example of where this program might be used is in Component Test. You have, for example, a batch of one hundred 1,000 ohm 5% resistors. Your job is to test them to be sure that they are within specification and to check for trends such as the mean value increasing between batches.

Running The Program

The program does not have provisions for setting the 3468A to your desired measurement function, range, etc. You must either do this manually from the 3468A front panel, or modify line 03 to specify the function, range, etc. Remember that the T2 command must be the last command in the string.

[XEQ] [ALPHA] STAT [ALPHA]

When the 3468A displays - S. TRIG - SRQ - connect your first device to be sampled (first resistor, voltage, etc.) to the 3468A and press the multimeters single trigger key.

The 3468A will take one measurement, display the reading, and send the result to the calculator for storage and future analysis. The multimeter will return with the same display - S. TRIG -SRQ.

Remove the first device from the 3468A and connect the second device. Again, press the 3468A single trigger key.

Continue in this manner until all devices have been tested. At that time, press the 3468A SRQ key (instead of the single trigger key) to begin the analysis of the measurements. First, the 3468A will display the number of samples or devices tested:

N=XXX.0000

Press the 3468A's SRQ key. The 3468A will momentarily display the word "MEAN" and then display the calculated mean value.

MEAN
XXXXXXX

Press SRQ again. The next value displayed is the standard deviation.

STANDARD DEV.
XXXXXXX

Press the SRQ key again to display the minimum value measured.

MINIMUM
XXXXXXX

STATISTICS (Cont'd)

The maximum value is displayed next, press the SRQ key.

MAXIMUM
XXXXXXX

Pressing the SRQ key again causes the program to prompt with the display:

SRQ = RESTART

This means to press the 3468A SRQ key one more time to restart the statistics program for new data.

```
01♦LBL "STAT"          Label statistics
02 XEQ "INI68"         Execute Initialization program
03 "T2"                }
04 OUTA                } Set 3468A for Single Trigger
05 ΣREG 11             }
06 CLΣ                 } Register 11 is used for counting number of entries
07 9 E9                }
08 STO 00              }
09 CHS                 } Upper and lower measurement limits
10 STO 01              }
11 CLX                 }
12♦LBL 00              }
13 "D2S. TRIG-SRQ"     } Display message and set 3468A to local mode
14 OUTA                }
15 LOCAL               }
16♦LBL 01
17 INSTAT              Input status byte
18 FS? 04              }
19 GTO 02              } If flag 4 (SRQ) is set go to LBL 02 (line 34)
20 FC? 00              }
21 GTO 01              } If data is ready (flag 00 clear) proceed to line 22, if not, go to LBL 01 (line 16)
22 IND                 }
23 Σ+                  } Input reading and increment Reg 11
24 RCL 00              }
25 LASTX               }
26 X<Y?                }
27 STO 00              } Test reading in case of exceeding upper and lower limits
28 RCL 01              }
29 X<>Y                }
30 X>Y?                }
31 STO 01              }
32 R↑                  Roll up and store reading
33 GTO 00              Go to LBL 00 (line 12) for next reading
34♦LBL 02              SRQ key pressed, all samples taken
35 "D2N="              }
36 ARCL 16             } Display number of samples (lines 67-73)
37 XEQ 04              }
38 "D2MEAN"            }
39 OUTA                }
40 "D2"                } Calculate and display mean value (lines 65-76)
41 MEAN                }
42 ARCL X              }
43 XEQ 03              }
44 "D2STANDARD DEV."   }
45 OUTA                }
46 "D2"                } Calculate and display standard deviation (lines 65-76)
47 SDEV                }
48 ARCL X              }
49 XEQ 03              }
50 "D2MINIMUM"         }
51 OUTA                }
52 "D2"                } ~~Calculate and~~ display minimum value (lines 65-76)
53 ARCL 00             }
54 XEQ 03              }
55 "D2MAXIMUM"         }
56 OUTA                }
57 "D2"                } ~~Calculate and~~ display maximum value (lines 65-76)
58 ARCL 01             }
59 XEQ 03              }
60 "D2SRQ=RESTART"     }
61 XEQ 04              }
62 FS? 04              } If SRQ key pressed start over (lines 67-76)
63 GTO "STAT"          }
64 GTO 00              }
65♦LBL 03              }
66 PSE                 }
67♦LBL 04              }
68 OUTA                } Pause (line 66)
69 LOCAL               } Output message (line 68)
70♦LBL 05              } Enable 3468A keyboard (line 69)
71 INSTAT              } Input status (line 71)
72 FS? 04              } SRQ flag set test (line 72)
73 RTN                 } Data Ready flag test (line 74)
74 FS? 00              }
75 RTN                 }
76 GTO 05              }
77 .END.
```

STATISTICS (Cont'd)

STAT

HEWLETT PACKARD
3468A PROGRAM

PROGRAM REGISTERS NEEDED: 32

ROW 1 (1 : 2)

ROW 2 (2 : 7)

ROW 3 (8 : 13)

ROW 4 (13 : 17)

ROW 5 (18 : 25)

ROW 6 (26 : 35)

ROW 7 (35 : 38)

ROW 8 (38 : 44)

ROW 9 (44 : 44)

ROW 10 (44 : 49)

ROW 11 (50 : 52)

ROW 12 (52 : 55)

ROW 13 (55 : 59)

ROW 14 (59 : 60)

ROW 15 (60 : 63)

ROW 16 (64 : 72)

ROW 17 (72 : 77)

DATA LOGGER

The following data logger program (LOGGER) illustrates the power and and flexibility of an HP-IL system. The program takes ten sets of ten readings each, for a total of 100 readings, and stores them on a cassette tape for future reference. The program can easily be enhanced by adding a linearization routine between lines 15 and 16. An example of linearization is the previous program where the resistance of a thermistor was converted to a temperature. In this way, temperature measurements rather than resistance measurements are stored on the tape.

The program READ demonstrates how easily data can be read from the cassette tape and listed on a printer. Again, this program can be enhanced by adding a routine to plot the data on the printer. Of course, the data can also be printed or plotted as the measurements are being taken in the LOGGER program.

Running the LOGGER Program

Make certain that the interface loop connections have been made between the 3468A multimeter, 41C/41CV calculator, 82161A Digital Cassette Drive, and the 82162A Printer. Turn all of the devices on.

Before data can be stored on the cassette tape, the tape must be initialized. This is done by executing the NEWM command (NEW Medium). Refer to the HP-IL Owners Manual.

Line 03 executes the MVAC subprogram. This can be changed to suit your needs. Deleting the line entirely gives you the freedom of setting the 3468A manually as often as needed. When the device to be tested has been connected to the 3468A input terminals and you are ready to begin, type:

[XEQ] [ALPHA] LOGGER [ALPHA]

How the Program Works

Space for storing the 100 readings must be allocated on the cassette tape. This space (or file) is created and given the name DATA in lines 04, 05, and 06. Lines 07 and 08 are used to return to the beginning of the DATA file on the cassette for data storage.

Register 00 is used as a loop counter to take ten sets of readings. The value 1.010 is STOred into Register 00 (lines 09, 10) and is incremented and tested in line 22.

DATA LOGGER (Cont'd)

Register 01 (lines 12, 13) also acts as a loop counter, but counts ten readings per set (Register 00). The value 11.020 stored into register 01 specifies registers 11 through 20 as temporary storage registers for the measurement data. Line 15 triggers the 3468A and line 16 inputs the results. Line 17 stores the data in the register pointed to by Register 01. Register 01 is incremented after each reading to point to the next empty register in line 18.

Register 01 is also tested in line 18. Remember that program line 12 specified Register 20 as the last register to be used. If Register 01 points to register 21 then the program prepares to store the ten readings on the cassette. Line 20 calls out register 11 through 20 as data storage registers. The WRTRX command (line 21) writes the data from the storage registers to the cassette tape.

Register 00 is tested in line 22 to see if ten sets of ten readings each have been made. If not, the program loops back (line 23) to label 01 (line 11). When ten sets of measurements have been made, the program ends.

```
01♦LBL "LOGGER"      Label Logger
02 XEQ "INI68"       Execute initialize program
03 XEQ "MVAC"        }
04 "DATA"            }
05 100               } Set up DATA file on cassette
06 CREATE            } tape
07 0                 }
08 SEEKR             } Set up loop counter for ten
09 1.010             } sets of readings
10 STO 00            } Set up register 11 to 20 to
11♦LBL 01            } store readings
12 11.020            }
13 STO 01            }
14♦LBL 02            } Trigger the 3468A, input
15 TRIGGER           } reading and store
16 IND               }
17 STO IND 01        } If ten readings taken go to
18 ISG 01            } line 19, else go to line 13
19 GTO 02            } Store ten readings on
20 11.020            } cassette tape
21 WRTRX             } End if ten sets of readings
22 ISG 00            } have been taken, else go to
23 GTO 01            } line 10
24 .END.
```

```
01♦LBL "READ"        Label READ
02 "DATA"            }
03 0                 } Find beginning of DATA file
04 SEEKR             } on cassette tape
05 1.010             } Set up loop counter for ten
06 STO 00            } sets of readings
07♦LBL 01            }
08 11.020            } Read one set of ten readings
09 READRX            }
10 11.020            } Print set
11 PRREGX            }
12 ISG 00            } End if ten sets have been
13 GTO 01            } read, else go to line 07
14 .END.
```

DATA LOGGER (Cont'd)

LOGGER

HEWLETT PACKARD
3468A PROGRAM

PROGRAM REGISTERS NEEDED: 11

ROW 1 (1 : 2)

ROW 2 (2 : 4)

ROW 3 (4 : 9)

ROW 4 (9 : 15)

ROW 5 (15 : 20)

ROW 6 (20 : 24)

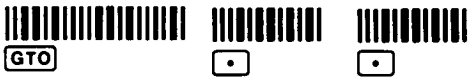

GTO

READ

HEWLETT PACKARD
3468A PROGRAM

PROGRAM REGISTERS NEEDED: 7

ROW 1 (1 : 2)

ROW 2 (3 : 8)

ROW 3 (8 : 11)

ROW 4 (12 : 14)

GTO

Command Codes

(The command codes are also found on the under side of the 3468A)

Function	Code	Range Codes R1	R2	R3	R4	R5	R6	RA Autorange
DC Volts	F1	.3V	3V	30V	300V	*	*	
AC Volts	F2	.3V	3V	30V	300V	*	*	
2-Wire Ohms	F3	300Ω	3KΩ	30KΩ	300KΩ	3MΩ	30MΩ	
4-Wire Ohms	F4	300Ω	3KΩ	30KΩ	300KΩ	3MΩ	30MΩ	
DC Amps	F5	3A	*	*	*	*	*	
AC Amps	F6	300mA	3A	*	*	*	*	
Extended Ohms	F7	(default range) 10MΩ//Rx	*	*	*	*	*	

* indicates an invalid combination of Function and Range codes.

Other Program Codes:

Function	Qualifier	Description	Example
N	3,4,5	Selects the number of digits of display.	N3 selects the 3 1/2 digit display mode.
T	1,2	Trigger Mode: Internal, Single.	T1 selects internal trigger, T2 selects single.
Z	0,1	Autozero mode: off,on.	Z0 turns Autozero off.
C		Calibrate (see 3468A Service Manual).	
D	1,2	Display mode: Normal, Text.	D2text displays the message "text" on the 3468A display.
Mbb	0 to 77 (octal)	Set SRQ mask to octal value bb. This sets the lower 6 bits of mask. The Mbb command is executed as sent. Therefore, if the second "b" is not sent, bits 3 to 6 are set by the "b" that is received.	M01 sets the 3468A for data ready SRQ.
B	1	Binary Status. The 3468A, if it is addressed to talk immediately after receiving the B1 command, will output its five binary status bytes. This command also clears the error register (byte 4). The meaning of the bytes is as follows: Byte 1: Function, Range, Number of Digits Octal value of bits 7,6,5 = 1 DC Volts = 2 AC Volts = 3 2-W Ohms = 4 4-W Ohms = 5 DC Amps = 6 AC Amps = 7 Extended Ohms Octal value of bits 4,3,2 = 1 Range R1 = 2 R2 = 3 R3 = 4 R4 = 5 R5 = 6 R6 Octal value of bits 1,0 = 0 invalid = 1 5 1/2 digit = 2 4 1/2 digit = 3 3 1/2 digit	

Command Codes (Cont'd)

Function	Qualifier	Description	Example
B	1	Byte 2: Status bits Bits 7,6,5 are not used (always 0). Bit 4: "1" is calibration ram enabled. Bit 3: "1" is line frequency switch set to 50 Hz position. "0" is 60Hz position. Bit 2: "1" is Autozero on, "0" is Autozero off. Bit 1: "1" is Autorange on. Bit 0: "1" is internal trigger, "0" is single trigger. Byte 3: SRQ Mask Bit 7: "1" SRQ if power-on or Test/Reset set by rear panel switch #3. Bit 6: not used (always "0"). Bit 5: "1" SRQ if calibration procedure failed. Bit 4: "1" SRQ if keyboard SRQ is pressed. Bit 3: "1" SRQ if hardware error occurs. Bit 2: "1" SRQ if syntax error occurs. Bit 1: "1" SRQ if invalid syntax error occurs. Bit 0: SRQ as each reading becomes available. Byte 4: Error information Bits 7,6,5,4 are not used (always "0"). Bit 3: "1" A/D error detected. Bit 2: "1" Microprocessor ROM error. Bit 1: "1" Microprocessor RAM error. Bit 0: "1" Calibration RAM error, the calibration of the 3468A is suspect. Byte 5: A/D Converter DAC Value This byte will contain a value between 0 and 63 (decimal). This represents the setting of the internal Digital to Analog converter (DAC), and is primarily for diagnostic purposes.	

Chapter IV
Basic Language Programming

Introduction

In this chapter you will learn about remote programming your 3468A over the Hewlett-Packard Interface Loop (HP-IL) using a computer / controller. The -hp- Model 85 computer with an 82938A HP-IL interface module is used in the examples. If you are not familiar with HP-IL or some of the terms used in this chapter, Appendix A contains a concise description of HP-IL. Be sure that you have read through or at least familiarized yourself with Chapter 2 of this manual before starting this chapter. You will need to understand the operating characteristics of the 3468A before you begin programming it.

Do This

Turn off both the controller and 3468A. Connect the 3468A to the controller HP-IL interface. Make sure that no other devices are connected to the interface. Turn the 3468A on and wait until it finishes its self test, but do not turn on the controller.

Press:

The 3468A will display its factory preset address: ADDRESS 22.

Now, turn on the controller and wait a few seconds for the display to come on.

Again, press:

When the controller was turned on, it automatically assigned addresses to each device in the loop. Since the 3468A is the only device in the loop it is assigned an address of 1.

Trying Out a Command

Before we actually begin the programming discussion, let's look at a simple example that displays your name on the 3468A display. If you have an -hp- Model 85 or other HP-IL controller, enter the command as shown below. Use your own name, or any message up to 12 characters (capital letters only), in place of "your name".

Type The Message:	**Press:**
OUTPUT 901;"D2your name"	[END LINE]

Actually, any message of up to 12 characters may be displayed in this manner. The command "D2your name" tells the 3468A to display the message "your name" in its display; "D2" is called the "COMMAND CODE". The 3468A cannot display lowercase letters, it displays unusual symbols instead. It can display, however, special characters such as $, %, &, #, etc. Try these characters in place of "your name".

At the end of the previous chapter is a blue page that describes each of the program commands the 3468A will respond to, and how they are used.

Addressing

Each instrument that you connect to the interface loop has a unique "address", and the 3468A is no different. The address provides a way for the controller to send or receive data from one instrument on the loop when actually there are several instruments connected together. In the previous example, where you displayed your name, we used the statement "OUTPUT 901". The "901" refers to the controller interface select code (isc) which is 9 and the 3468A address which is 01.

Remember that the controller automatically reassigns addresses to each device in the loop. Addresses are assigned sequentially to devices in the loop in the direction of information flow. The first device in the loop, after the controller, will have an address of "1". The second device will have an address of "2", and so on around the loop. The 3468A may be connected anywhere in the interface loop; the loop consisting of up to 30 devices. All the examples in this chapter assume that the 3468A will be the only instrument in the loop and therefore addressed at 901.

When the controller tells a particular instrument to talk, i.e., send data over the Interface Loop, we say that the instrument has been "Addressed to Talk". Likewise, when the controller tells an instrument to listen, i.e., receive data or instructions from the Loop, the instrument is said to have been "Addressed to Listen". The 3468A is capable of both talking and listening or it may be set to Talk-only, in which case it cannot listen to instructions or data coming over the Loop. There can be only one instrument addressed to talk on the Loop at any one time.

Sending Instructions to the 3468A

Command codes are used to cause the 3468A to change states, i.e., make an ac measurement instead of a dc measurement, or perform a particular operation such as output status information, etc. Look at the blue page at the end of the previous chapter. It provides a description the Instruction Messages the 3468A will respond to and how they are used. The underside of the 3468A also contains a table of command codes.

Procedure

Decide what you want the instrument to do and determine the appropriate Command Codes. For example, the Command Code for DC Volts is F1 (Function 1), the Code for the 3 volt range is R2 (Range 2). Let's look at an example and break down the instruction message. To set the 3468A to the DC Volts function and 3 volt range, the following message would be sent:

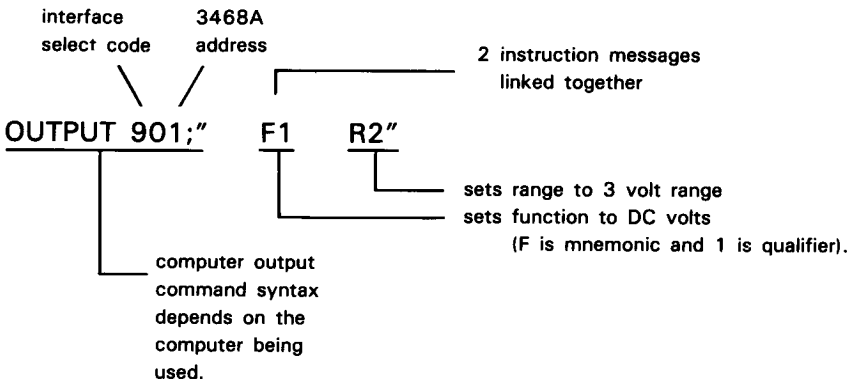

Figure 4-1. Instruction Example

As you can see from the example, more than one instruction may be sent to the 3468A at one time; any number of instructions may be included in the command string. Now, let's take another look at using multiple instructions.

Sample Problem

Suppose you need to make an ac voltage measurement between .20 volts and 1 volt. You also want Autozero on and the measurement to be made in the 4 1/2 digit mode. What series of instructions will achieve this?

First, it is an ac voltage measurement, therefore instruction "F2" is used. You don't know exactly what range to use, so use the autorange feature, "RA". The instruction for autozero on is "Z1", and for the 4 1/2 digit mode, "N4" . The command string now looks like:

"F2 RA Z1 N4"

Since you know the voltage to be measured is small, set the 3468A to a low range before we autorange. The instruction "R2" will do this. Furthermore, if we want the meter to only take one reading, add the instruction "T2" to the end of the string. By adding it at the end, the meter is set up for the measurement before the reading is actually triggered. The complete string, along with the OUTPUT statement is:

```
OUTPUT 901; "F2R1RAZ1N4T2"
```

Instructions are implemented as they are received through the loop. In other words, the 3468A will go to the ac volts mode before it goes to the lowest range. It will go to the lowest range before autorange, etc. The last thing it will do is trigger for the measurement.

Programming Hints

When more than one command is sent to the 3468A in one "OUTPUT" instruction statement, the commands are executed as they arrive. Therefore it is best to make the trigger statement the last statement in the command string so that the 3468A will be set up for the measurement before it triggers. If you send the command "T2T1", the "T1" command is the last one received and will be in effect.

Instructions are sent to the 3468A as a series of 8-bit ASCII characters. All lowercase letters, spaces, commas, semicolons, Carriage Return (CR) and Line Feed (LF) are ignored and may be freely used to format commands for easy readability. All null characters, form feed, and vertical and horizontal tab characters result in a syntax errror. All other characters and sequences not explicitly allowed (see the Command Table) also result in a syntax error. Errors will be discussed later. For example, sending the message:

```
OUTPUT 901;"Function 1 Range 1"
```

would be the same as:

```
OUTPUT 901;"F1R1"
```

When a multicharacter command is received, if a character is received which does not fit into the syntax of the command, the command will be aborted and an error will be generated. An attempt is made to process the character as if it were the first character of another command. For example, the command "FR3" will cause a syntax error but then go on to range 3 (that is, "R3").

Commands which accept binary arguments (represented by x in the command table) are exceptions to the above rules. Any of the 256 possible 8-bit bytes may be sent as a binary argument. Similarly, any ASCII character may be sent as part of a D2 text message. Note, however, that the 3468A display recognizes only the lower six bits of the ASCII code (Appendix B).

Receiving Data from the 3468A

The 3468A has the ability to talk to the computer or other instruments, giving the results of measurements or status information. The controller must tell or "address" the 3468A to talk in order for it to send data.

Example. From the last section we saw how to make the voltmeter go to the DC Volts function and 3V range. Now we will see how to read back the measured voltage.

```
10 OUTPUT 901;"F1R2"     (from the last section)
20 ENTER 901; A$
30 DISP A$
40 END
```

The 3468A is addressed to talk by the ENTER 901 command in the second line. The measurement result is stored in the string variable A$ and displayed on the controller's display. Remember that the actual computer syntax used (i.e., ENTER, OUTPUT, DISPLAY, etc.) is dependent on the computer that you are using and may be different than the examples given. You should refer to your computer's I/O programming manual.

Output Format

Messages are sent by the 3468A as 13 bytes in the following formats:

Voltmeter Reading:	±d.dddddE±d CR LF
Overload:	+9.99999E+9 CR LF

The character "d" represents a single digit. If the 3468A is in the 4 1/2 digit mode, the last digit returned before the "E" will be a 0. In the 3 1/2 digit mode the last 2 digits will be 0's.

3468A Bus Capabilities

So far we have seen how to program the 3468A for specific operations and how to read back the data. But now it is time to move on and look at special HP-IL commands and advanced programming topics.

3468A Response to Loop Messages

The following topics, arranged in alphabetical order, deal with BASIC language controller HP-IL commands and the way the 3468A responds to them. Refer to the I/O programming manual of your controller for specific information on syntax and actions taken by the HP-IL interface when sending the message. The examples given apply to the -hp- Model 85 controller.

CLEAR

Examples

```
CLEAR 9      (device clear)
CLEAR 901    (selected device clear)
```

Comments

Upon receiving the CLEAR message, the 3468A will be placed into its turn-on state. Any partially completed I/O operation is aborted. The SRQ Mask is cleared except for the power-on SRQ bit (bit 7) which is set by switch 3 on the rear panel. The power-on state for the 3468A is: DC Volts function, Autorange, Internal Trigger, Autozero On, and 5 1/2 digit mode.

LOCAL

Examples

```
LOCAL 9
LOCAL 901
```

Comments

The LOCAL 901 message clears the 3468A from the REMOTE operation mode and reenables front panel control. Pressing the front panel LOCAL key accomplishes the same thing, provided the key has not been disabled by the LOCAL LOCKOUT Message. LOCAL 9 removes every instrument on interface 9 from the remote mode.

If the 3468A is in Remote with Local Lockout set, the only way to return to front panel control is to either turn power off and then on again or execute the Clear Lockout / Set Local (CL/SL) message. For many controllers this is the same as the LOCAL command, i.e., LOCAL 9. The command LOCAL 9 takes all instruments out of Local Lockout that are on that loop. The command LOCAL 901 would return the 3468A to front panel control but a subsequent REMOTE command (or OUTPUT 901) would return it to LOCAL LOCKOUT.

LOCAL LOCKOUT

Example

```
LOCAL LOCKOUT 9
```

Comments

The LOCAL LOCKOUT message locks out the 3468A's front panel keys, including the LOCAL and SRQ keys. The lockout will remain in effect until it is cleared over the interface loop by sending the LOCAL message to the multimeter or cycling the 3468A's power.

Examples

```
REMOTE 9
REMOTE 901
```

Comments

As a general rule, the command REMOTE 9 should be executed at the beginning of each program. This ensures that the controller has reassigned addresses for each device. The REMOTE command is used to enable the 3468A to switch from local front panel control to remote program control. The 3468A must actually be addressed before it will go into its Remote state.

The Remote state for the 3468A means that the front panel keyboard (except the LOCAL and SRQ keys) is disabled. The RMT annunciator in the display is turned on. The 3468A remains in the same state after it receives the REMOTE command that it was in before receiving it. To disable the LOCAL and SRQ keys use the LOCAL LOCKOUT command.

SERVICE REQUEST (SRQ)

Another important feature of the 3468A is you can program it to interrupt the controller when certain conditions are met. Of course, the controller must also be programmed to respond to the interrupt. The Require Service (SRQ) message is used to implement this and is independent of all other HP-IL activity. The 3468A MUST BE PROGRAMMED for the interrupt before the interrupt will take place. The following list gives the possible causes of interrupt that the 3468A can be programmed for.

1. Power-on/ Reset. The 3468A will interrupt the controller when the 3468A power is turned on.

2. CAL Failure. The 3468A will interrupt the controller if an attempted calibration failed.

3. Front Panel Keyboard. You can use the front panel SRQ key on the 3468A to interrupt the controller.

4. Hardware Error. If a hardware error occurs, the controller would be interrupted.

5. Syntax Error. If the controller sent an invalid instruction, the 3468A would interrupt the controller.

6. Data Ready. The 3468A would interrupt the controller after each completed measurement.

7. Invalid Function and Range combinations.

How to use SRQ

When the Require Service message (SRQ) is sent, the computer must determine first which instrument is requesting service. This is done by conducting a SERIAL POLL (SPOLL) of every device on the loop which is capable of requesting service. When an instrument is polled, it responds by sending a "STATUS BYTE" which indicates whether it requires service, and if so, the nature of the request. If the Status Byte for the instrument polled indicates that it was not requesting service, the computer would continue to poll the other instruments on the loop until the proper one is located. This, of course assumes that the controller has been programmed to respond to the SRQ interrupt.

The Status Byte together with the Service Request (SRQ) Mask determine when the Require Service (RQS) bit is to be set. Setting RQS causes SRQ to be sent on the HP-IL. A Serial Poll of the 3468A will clear SRQ and it will remain clear until another reason for setting RQS occurs. RQS on the other hand, is set if one or more corresponding bits in the Status Byte and SRQ Mask are both set. RQS is cleared whenever all corresponding bits are not both set. A Serial Poll then, may cause RQS to be cleared but not in all cases. Bits 2, 4, 5, and 7 are cleared with a Serial Poll.

Status Register and Status Byte

The status register is used to monitor the seven possible interrupt conditions. It is possible for one or more bits of the Status Register to be true without the 3468A causing an interrupt. The interrupt will only occur when the SRQ mask has been set for particular conditions. Refer to Figure 4-2. If the SRQ mask is set for certain conditions and one or more of those conditions occur, bit 6 of the status register will go true (true being a "1"). The SRQ annunciator in the display will turn on, and the HP-IL SRQ message will be sent. The controller must be programmed to respond to the SRQ message. For a more complete description of the Status Byte bits, refer to SPOLL (Serial Poll).

The Status Byte is an 8-bit byte that may be used to determine the current status of the 3468A regardless of whether an interrupt (SRQ) has occurred. The Status Byte comes from the status register and is output in response to a serial poll which is described in the next section.

Bit 7	Bit 6	Bit 5	Bit 4	Bit 3	Bit 2	Bit 1	Bit 0
Power-on Reset	RQS	Cal Failed	Front Panel SRQ	Hardware Error	Syntax Error	Invalid Range	Data Ready

Figure 4-2. Status Register

Setting the SRQ Mask

The SRQ mask can only be set to mask bits 0-5 on the Status Register. Default mask value is 00. To set the mask first determine which conditions you want to interrupt the controller, e.g., data ready, calibration procedure failed, syntax error, etc. Determine the two digit octal code for those conditions. Then, output the "M" instruction mnemonic followed by the octal code as the qualifier, that is: "Mbb", where bb is the octal code. Think of the SRQ mask as a mask that sits over the lower six bits of the status register and masks out those conditions you don't want to cause an interrupt. Figure 4-3 shows the status byte and the SRQ mask set for bit 0, Data Ready.

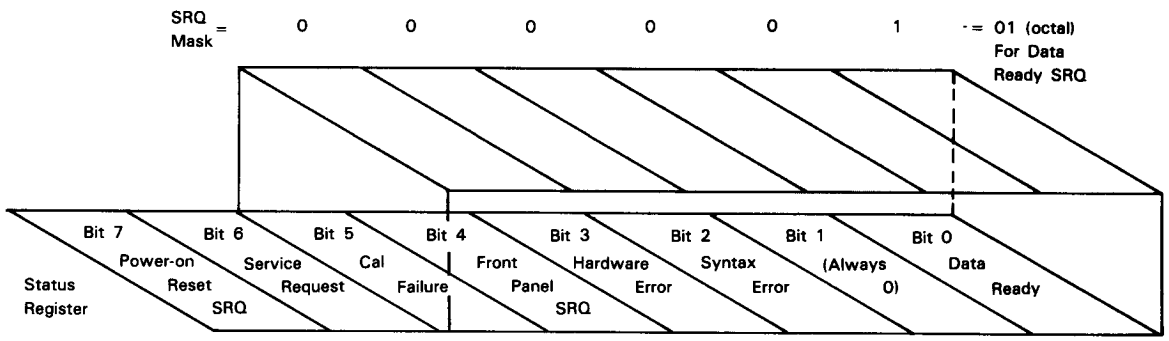

Figure 4-3. Status Byte and SRQ Mask

Example 1. Data Ready SRQ

Data Ready is a feature of the 3468A that allows it to interrupt the controller after each completed measurement (data ready). This means that the controller doesn't waste valuable computing time waiting for measurement data but proceeds with its work until interrupted. To enable the data ready feature on the 3468A, bit 0 on the SRQ mask must be set. Remember that bit 0 will be true in the status register anytime data is ready but for the SRQ to occur the mask must be set. The bit pattern for the mask would look like:

bit #:	5	4	3	2	1	0
value:	0	0	0	0	0	1
		0			1	

01 is the octal representation (see also Figure 4-4)

Consequently, we would use the command: OUTPUT 901;"M01" to set the mask for Data Ready. Therefore, whenever the 3468A has data ready it will interrupt the controller via the SRQ. The controller will only be interrupted if bit 0 is true, meaning that data is ready. Bits 1 through 5 will not interrupt the controller if they go true because the mask was not set for those bits. When data becomes ready, the SRQ annunciator turns on in the display, and remains on, until the controller responds by doing a serial poll, executing the CLEAR command, or entering a measurement form the 3468A.

How would this look in a simple -hp- Model 85 program?

```
 10 ! DATA READY EXAMPLE
 20 ! -hp- 85 VERSION
 30 ! 3468A AT ADDRESS 901
 40 REMOTE 9
 50 OUTPUT 901 ;"M01"
 60 ON INTR 9 GOSUB 1000
 70 ENABLE INTR 9;8
 80 ! The body of the program go
    es here
990 END
1000 P=SPOLL(901)
1010 ENTER 901 ; R
1020 DISP R
1030 RETURN
```

Line	Description
40	Puts the interface into the remote mode.
50	Outputs the SRQ mask.
60	Instructs the computer where to go (line 1000) when an interrupt (SRQ) occurs on interface 9.
70	ENABLE INTR9;8 actually enables the -hp- Model 85 to respond to the SRQ. SRQ is octal code "8" in the -hp- Model 85 control register.
80-990	These lines contain the main body of the program
1000	This is the start of the interrupt subroutine. SPOLL returns the 3468A status byte to variable "P". It also resets bit 6, if it was set, of the status register.
1010-1030	Line 1010 reads the data and resets bit 0 of the status register. Line 1020 displays the data. Line 1030 returns program control to where the program was interrupted.

Example 2. Front Panel SRQ

The front panel SRQ feature of the 3468A provides you with a way of manually interrupting the controller from the multimeter front panel. This feature is enabled by setting bit 4 of the SRQ mask, command "M20". Once this is done, pressing the 3468A front panel SRQ key causes the 3468A to request service (SRQ) from the controller. The SRQ annunciator turns on in the display until the controller responds by doing a serial poll or the CLEAR command.

The following program shows how easily this can be accomplished.

```
 10 ! FRONT PANEL SRQ EXAMPLE
 20 ! -hp- 85 VERSION
 30 ! 3468A AT ADDRESS 901
 40 REMOTE 9
 50 OUTPUT 901 ;"M20"
 60 ON INTR 9 GOSUB 1000
 70 ENABLE INTR 9;8
 80 ! The body of the program go
    es here
990 END
1000 P=SPOLL(901)
1010 IF BIT(P,4) THEN DISP "SRQ
     key pressed"
1020 RETURN
```

Line	Description
50	The "M20" statement sets the 3468A to respond to the front panel SRQ key.
60	This tells the computer where to go (line 1000) when an SRQ interrupt occurs.
70	ENABLE INTR actually allows the controller to respond to interrupts.
80-990	These lines contain the body of the program.
1000	SPOLL returns 3468A status byte to variable P. It also clears the status register.
1010	Bit 4 of the status byte (P) is checked to make sure it is a "1". If it is, the message SRQ KEY PRESSED is displayed. If it isn't, then something else caused the interrupt.
1020	This line returns program control to where it was interrupted.

Example

```
P=SPOLL 901
```

Comments

Serial poll allows you to determine the current status of the 3468A. When the 3468A receives the serial poll message, it returns its status byte (status register). Many controllers will display the byte as the sum of the values of the individual bits that are set. If bits 7 and 0 are set, for example, the value would be shown as 129 (129 = 128+1). The 8 bits of the status byte and their respective values are shown in Figure 4-4, followed by a description of the bits.

	Bit 7	Bit 6	Bit 5	Bit 4	Bit 3	Bit 2	Bit 1	Bit 0
	Power-on Reset	RQS	Cal Failed	Front Panel SRQ	Hardware Error	Syntax Error	N/A (always 0)	Data Ready
Decimal Value	128	64	32	16	8	4	2	1

Figure 4-4. Status Byte

Data Ready Bit 0 — When this bit is set to 1, it indicates that the 3468A will output a reading if it is addressed to talk. This bit will return to 0 when the controller begins to accept the reading, or when some change in the programmed state of the 3468A causes the reading to be no longer available.

Bit 1 — Bit 1 will be set to "1" when an invalid combination of Function code and Range code is sent to the 3468A. For example, DC volts function (F1) does not have a range that corresponds to range code R6. This bit will be cleared when a valid Function and Range combination is selected.

Syntax Error Bit 2 — When set to 1 this bit indicates that a command has been received over the HP-IL that is syntactically incorrect. It will be cleared with a Serial Poll of the 3468A.

Hardware Error Bit 3 — This bit, when it is set to 1, indicates that a hardware error of some sort has occurred. This may be the failure of a self test routine, a problem with the A/D converter, or a checksum error in the calibration RAM. More information can be obtained about the error by reading the 3468A error register which will clear the bit (see the B1 command). The calibration RAM checksum is checked every time a reading is made.

Front Panel SRQ Bit 4	When this bit is set to a 1 it indicates that the front panel SRQ button has been pressed. This bit is cleared when the 3468A is Serial Polled.
Calibration Fail Bit 5	This bit is used to indicate that an attempted calibration has failed. The bit will be set to 1 under this condition. A Serial Poll will clear this bit.
Require Service Bit 6	This bit is set to 1 whenever one of the events specified for bits 0 through 5 above occurs at the same time that the corresponding bit in the mask register is set. The bit is also set at power-on or when Test/Reset is executed if the PON SRQ switch on the rear panel is turned on. This bit is cleared only when the conditions for requesting service no longer exist, i.e. bits 1-5 and 7 are cleared.
Power-on Reset Bit 7	This bit is set to 1 when a power-on reset has occurred. If switch 3 on the rear panel block of switches is set to the "1" or up position, bit 6 will be true and the SRQ message is sent. Bit 7 is cleared when the 3468A is Serial Polled.

The Status Byte together with the Service Request (SRQ) Mask determine when the Require Service (RQS) bit is to be set. Setting RQS causes SRQ to be sent on the HP-IL. A Serial Poll of the 3468A will clear SRQ and it will remain clear until another reason for setting RQS occurs. RQS on the other hand, is set if one or more corresponding bits in the Status Byte and SRQ Mask are both set. RQS is cleared whenever all corresponding bits are not both set. A Serial Poll then, may cause RQS to be cleared but not in all cases. Bits 2, 4, 5, and 7 are cleared with a Serial Poll.

Try this simple exercise.

1. Reset the 3468A. This should be done by cycling the LINE switch. Without setting the SRQ mask, perform a serial poll on the 3468A. Remember to check the command structure for the controller you are using. The status byte returned by the 3468A should indicate that bits 0 and 7 are true. Many controllers will show a value of "129". Looking at Figure 4-4 we can see that the value 129 is equal to the sum of the decimal values of bits 0 and 7. Bit 7 is true because of the power-on/reset that occurred. Bit 0 indicates that a measurement has been made and data is ready. This step of the exercise simply serves to show that bits in the status register may be true without causing the Service Request message to be sent. Remember that when Service Request is sent, the SRQ annunciator turns on.

2. Now turn the 3468A off. On the rear panel find the bank of switches and set switch 3, Power-on SRQ, to the up (1) position. When you turn the 3468A back on, the SRQ annunciator should be on in the display. Now do a serial poll. The status byte returned by the 3468A shows a value of 193. This means that bits 7, 6, and 1 were true (128+64+1=193). Bit 6 is true because of the power-on SRQ condition. Bit 7 is true, as in the first step, because a power-on reset occurred. Because the Power-on SRQ switch was "SET", when the 3468A was turned on, it sent the Service Request message (SRQ). After you do the serial poll, the SRQ annunciator will turn off.

3. Finally, turn the 3468A off and return switch 3 to the down position. Turn the 3468A on, notice that the SRQ annunciator is not on, and send it the message "M01". M01 sets the SRQ mask for the data ready condition. In just a moment the SRQ annunciator will turn on in the display. Again do a serial poll. The value returned should again be 193 (bits 7, 6, 1). This time the SRQ occurred because the SRQ Mask was set for bit 0, Data Ready. Do another Serial Poll and notice that the SRQ annunciator goes off momentarily until new data is available. The value returned from this second Serial Poll is 65 because bit 7 was cleared by the first poll.

The previous section on Service Request gave two example programs demonstrating SRQ interrupts. Look at the second program, FRONT PANEL SRQ. Change line 70 to read: 70 GOTO 60 and run the program. Line 40 sets the SRQ mask to front panel SRQ. Line 1000 performs a serial poll when, and only when, an SRQ condition occurs (i.e., when you press the 3468A SRQ key). Line 1010 looks at bit 4 of the Status Byte to verify that it was the front panel SRQ key that caused the interrupt.

Examples

```
TRIGGER 9
TRIGGER 901
```

Comments

If the 3468A has been addressed to listen, the TRIGGER message (also known as GET, for Group Execute Trigger) will trigger the multimeter for a new reading. If a reading is in progress at the time the TRIGGER message is received, the reading will be aborted and a new reading started.

Topics in Advanced Programming

The following five programs illustrate the flexibility and measurement power of the 3468A. The programs include using a thermistor to accurately measure temperature, achieving the maximum reading rate, using the 3468A Status Bytes, and more. Although the programs were developed on an -hp- Model 85 desktop computer they may easily be modified to run on any other controller. In many cases, suggestions are made for modifying the programs to suit your individual needs.

EXTENDED OHMS

The extended ohms feature is available only via the HP-IL F7 commands. With extended ohms you can measure resistances above 30 Mohms. When in the Extended Ohms mode, the 3468A goes to the 30 Mohm range, 2-wire mode. An internal resistance of approximately 10 Mohms is placed in parallel with the inputs. If this resistance is measured first and then the unknown resistor connected to the inputs, the parallel combination can be measured and a calculation performed to determine the approximate value of the unknown resistance. The formula for the calculation is:

$$Rx = \frac{Ri * Rt}{Ri - Rt}$$

Rx is the unknown resistance, Ri is the measured value of the internal 10 Mohm resistor and Rt is the measured value of the parallel combination. The test leads should be a very short shielded twisted pair to not pick up radiated noise.

A program that will make the necessary measurements, perform the calculations, and display the value for the unknown resistor, is given in the following figure.

```
 10 ! EXTENDED OHMS EXAMPLE
 20 ! -hp- 85 VERSION
 30 CLEAR
 40 REMOTE 9
 50 A1=901
 60 OUTPUT A1 ;"D2 OPEN TERMS "
 70 DISP "    EXTENDED OHMS EXAM
    PLE" @ DISP
 80 DISP "Extended ohms is a 2-w
    ire ohms"
 90 DISP "measurement for resist
    ances"
100 DISP "above 30 Mohms." @ DIS
    P
110 DISP "Open the 3478A input t
    erminals." @ DISP
120 DISP "PRESS [CONT] TO BEGIN.
    "
130 PAUSE
140 OUTPUT A1 ;"F7N5Z1T2"
150 ENTER A1 ; R1
160 OUTPUT A1 ;"D2ADD RESISTOR"
170 CLEAR @ DISP "Connect resist
    ance to be"
180 DISP "measured to the 3478A
    input"
190 DISP "terminals."
200 DISP @ DISP "       PRESS [CO
    NT]"
210 PAUSE
220 OUTPUT A1 ;"F7N5Z1T2"
230 ENTER A1 ; R2
240 R3=R1*R2/(R1-R2)
250 OUTPUT A1 ;"D2R=";R3/10^6
260 CLEAR @ DISP "THE RESISTANCE
     IS: ";R3/10^6;"MOHMS."
270 END
```

Lines	Description
40-50	Line 40 sets the interface at select code 9 to the REMOTE state. This ensures that all instruments in the loop have been autoaddressed. Line 50 sets variable A1 equal to the select code of the 3468A, i.e., 901.
60-130	These lines display messages to open the input terminals on the 3468A. Line 60 displays the message on the 3468A display.
140-150	The 3468A is set up for the extended ohms function (F7), 5½ digit display (N5), autozero on (Z1), and single trigger (T2) in line 140. Line 150 enters the readings of the internal 10 Mohm resistor into variable R1.
160-210	These lines display messages to connect the resistance to be measured to the 3468A input terminals.
220-230	These two lines are identical to lines 140-150. The resistance of the parallel combination is entered into variable R2.
240	Line 240 performs the calculation described above to determine the value of the unknown resistance.
250	The calculated resistance value is displayed on the 3468A display.
260	The calculated resistance value is displayed on the -hp- Model 85 screen.

TEMPERATURE MEASUREMENTS

The program shown in the following figure computes the temperature, in °C, corresponding to the resistance of a thermistor. The program has been designed to work with thermistors exhibiting a 5.000 KΩ resistance at 25°C, such as a type 44007 (-hp- part number 0837-0164) or equivalent.

The program gives you the option of selecting either 2-wire or 4-wire ohms measurements to be made on the thermistor. As it stands, the program sets the 3468A for a 2-wire measurement which gives suitable results if the thermistor is used at a temperature where its resistance is much greater than the resistance of the test leads. For greatest accuracy from a thermistor, a 4-wire resistance measurement should be used. To change to a 4-wire resistance measurement, delete the exclamation mark from line 50. The program is useful over a temperature range of −80°C to +150°C.

The coefficients in lines 60, 70, and 80 may be changed for different thermistors. For example, a thermistor exhibiting 2252Ω at 15°C - such as a type 44004 - would have coefficients of: Q1 = .0014684, Q2 = 00023827, and Q = .00000010112. Consult the manufacturer's data sheet for information on coefficients.

```
 10 ! TEMPERATURE MEASUREMENT
 20 ! WITH TYPE 44007 THERMISTOR
 30 ! -HP- 85 VERSION
 40 OUTPUT 901 ;"F3R3N4Z1"
 50 ! OUTPUT 901 ;"F3R4N4Z1"
 60 Q3=.0000000941
 70 Q2=.00023595
 80 Q1=.001286
 90 REMOTE 9
100 ENTER 901 ; B
110 Q4=LOG(B)
120 P=1/(Q1+Q4*(Q2+Q4*Q4*Q3))-27
    3.16
130 DISP P
140 GOTO 100
150 END
```

Lines	Description
40-50	Line 40 sets the 3468A to the 2-wire ohms mode (F3), 30 Kohm range (R3), 4½ digit display (N4), and autozero on (Z1). Line 50 is used to select the 4-wire ohms mode.
60-80	These three lines are the resistance to temperature conversion coefficients for the thermistor.
90	The REMOTE 9 command sets the interface at select code 9 to the remote state. This ensures that all devices in the loop have been autoaddressed by the controller.
100	Line 100 enters the measured resistance into variable B.
110-120	These two lines perform the resistance to temperature conversion.
130-140	The calculated temperature is displayed by line 130. Line 140 causes program execution to return for another resistance measurement.

dBm MEASUREMENTS

The dBm Program is used to calculate a power ratio using a 50Ω impedance as the reference. The dBm equation is:

$$dBm = 10 * LOG[(X^2/R)/1mw]$$

where X is the measured value, R is the impedance reference (50Ω's) and 1mw is the 0dBm reference.

```
10 ! dBm MEASUREMENT
20 ! -HP- 85 VERSION
30 OUTPUT 901 ;"F2RAN4Z1T1"
40 ENTER 901 ; B
50 P=10*LOG(B^2/50/.001)
60 DISP P
70 GOTO 40
80 END
```

Lines	Description
30	The REMOTE 9 message sets the interface at select code 9 to the remote mode. It also ensures that each device in the loop has been autoaddressed by the controller.
40-50	Line 40 sets the 3468A to the ac volts mode (F2), autorange (RA), 4½ digit display mode (N4), Autozero on (A1), and internal trigger (T1).
50	Line 50 performs the voltage to dBm conversion.
60-70	The dBm value is displayed by Line 60. Line 70 causes program execution to return for another reading.

STATUS BYTE COMMAND

There are 5 bytes, each 8 bit wide, which may be used to determine the current state of the 3468A. If the multimeter is addressed to talk after reception of the "B1" command it will output the 5 bytes. The meaning of the individual bytes is given in the table of 3468A programming commands.

The first of the following two programs demonstrates how to get the binary representation of the 5 bytes. The second program shows how the first three bits of the first byte may be used to indicate the measurement function the 3468A is set to. Similar steps may be used on the remaining bits and the other 4 bytes.

```
 10 ! BINARY STATUS EXAMPLE
 20 ! -HP- 85 VERSION
 30 REMOTE 9
 40 OUTPUT 901 ;"B1"
 50 ENTER 901 USING "5(1B)" ; B1
    ,B2,B3,B4,B5
 60 DISP "BYTE 1=";BIT(B1,7);BIT
    (B1,6);BIT(B1,5);BIT(B1,4);B
    IT(B1,3);BIT(B1,2);BIT(B1,1)
    ;BIT(B1,0)
 70 DISP "BYTE 2=";BIT(B2,7);BIT
    (B2,6);BIT(B2,5);BIT(B2,4);B
    IT(B2,3);BIT(B2,2);BIT(B2,1)
    ;BIT(B2,0)
 80 DISP "BYTE 3=";BIT(B3,7);BIT
    (B3,6);BIT(B3,5);BIT(B3,4);B
    IT(B3,3);BIT(B3,2);BIT(B3,1)
    ;BIT(B3,0)
 90 DISP "BYTE 4=";BIT(B4,7);BIT
    (B4,6);BIT(B4,5);BIT(B4,4);B
    IT(B4,3);BIT(B4,2);BIT(B4,1)
    ;BIT(B4,0)
100 DISP "BYTE 5=";BIT(B5,7);BIT
    (B5,6);BIT(B5,5);BIT(B5,4);B
    IT(B5,3);BIT(B5,2);BIT(B5,1)
    ;BIT(B5,0)
110 END
```

Lines	Description
30	The REMOTE 9 message sets the interface at select code 9 to the remote mode. It also ensures that each device in the loop has been autoaddressed by the controller.
40	This line outputs the command B1 to the 3468A which instructs it to output its five status bytes.
50	The five status bytes are input to the controller by this line.
60-100	Each line displays a bit by bit representation of one of the status bytes.

```
 10 ! STATE PROGRAM
 20 ! -HP- 85 VERSION
 30 REMOTE 9
 40 F=0
 50 OUTPUT 901 ;"B1"
 60 ENTER 901 USING "5(1B)" ; B1
 70 IF BIT(B1,7) THEN F=4
 80 IF BIT(B1,6) THEN F=F+2
 90 IF BIT(B1,5) THEN F=F+1
100 IF F=1 THEN G$="DC VOLTS"
110 IF F=2 THEN G$="AC VOLTS"
120 IF F=3 THEN G$="2-WIRE OHMS"
130 IF F=4 THEN G$="4-WIRE OHMS"
140 IF F=5 THEN G$="DC AMPS"
150 IF F=6 THEN G$="AC AMPS"
160 IF F=7 THEN G$="EXTENDED OHM
    S"
170 PRINT
180 PRINT "FUNCTION: ";G$
190 END
```

Lines	Description
30-60	These lines perform the same tasks as lines 30-50 in the binary status program.
70-90	These three lines test the first three bits of status byte #1 and assign a value to F accordingly.
100-160	The value of F is tested and G$ is assigned accordingly.
170-180	The value of G$, which is the function the 3468A is set to, is displayed on the -hp- Model 85 display.

Chapter V
Operator Maintenance

Introduction

Your 3468A Digital Multimeter was thoughtfully engineered for ease of use, accuracy, and perhaps most important, reliability. The instrument was carefully inspected before shipping and should be free of mechanical and electrical flaws and should be in proper working condition.

The information in this chapter covers the initial setup and installation of the 3468A and should be read before the 3468A is installed for use. This chapter also includes the specification table, warranty information, instructions about what to do if you suspect the multimeter is malfunctioning, obtaining repair service, cleaning, etc.

Accessories

Table 5-1 lists the available accessories for your 3468A. These accessories are offered to help you maximize the usability and convenience of your 3468A.

Table 5-1. Accessories

Accessory Number	Description
34118A	Test Leads, Dual banana to probes with safety guard rings
10023A	Temperature Probe
82167A	HP-IL Cables (set of 2)
11000A	Test Leads, Dual banana both ends
11002A	Test Leads, Dual banana to dual alligator
11003A	Test Leads, Dual banana to probe and alligator
11096B	RF Probe
34111A	High Voltage Probe
Option 910	Additional Operators Manual and Service Manual, -hp- Part Number 03468-90000, 03468-90001

Initial Inspection

Your 3468A was carefully inspected before it left the factory. It should be free of mars or scratches and in proper working order upon receipt. You should, however, inspect the instrument for any damage that may have occurred in transit. If the shipping container or cushioning material is damaged, it should be kept until the contents of the shipment have been checked for completeness and the instrument has been mechanically and electrically inspected. Procedures for checking the electrical performance of the 3468A are given in the 3468A SERVICE MANUAL (-hp- part number 03468-90001). If there is any mechanical damage or the contents are incomplete, or the instrument does not pass its performance tests, notify the nearest Hewlett-Packard office (a list of the -hp- Sales and Service Offices is located in the back of this manual). If the shipping container is damaged, or the cushioning material shows signs of stress, notify the carrier as well as the Hewlett-Packard office. Save the shipping materials for the carrier.

Preparation for Use

Power Requirements

The 3468A Digital Multimeter requires a power source of 100, 120, 220, or 240 Vac (−10%, +5%), 48 Hz to 440 Hz single phase. Maximum power consumption is 25 VA.

Line Voltage Selection

Refer to the rear panel of the 3468A for the line voltage option label. Make certain that the option marked on the label is the same as the nominal line voltage for your area. Also check the left most switch (50/60Hz switch) for the proper setting, i.e., up for 50Hz and down for 60Hz. Table 5-2 lists the available power options.

Table 5-2. Line Voltage Options

Option No.	Line Voltage	Frequency
001	Add Batteries	
315	100	50
316	100	60
325	120	50
326	120	60
335	220	50
336	220	60
345	240	50
346	240	60

CAUTION

Before connecting the multimeter to an ac power source, verify that the ac power source matches the power requirements of the multimeter as marked on the option label on the rear panel of the instrument. Only qualified service trained personnel are allowed to reconfigure the 3468A for the different line voltage options.

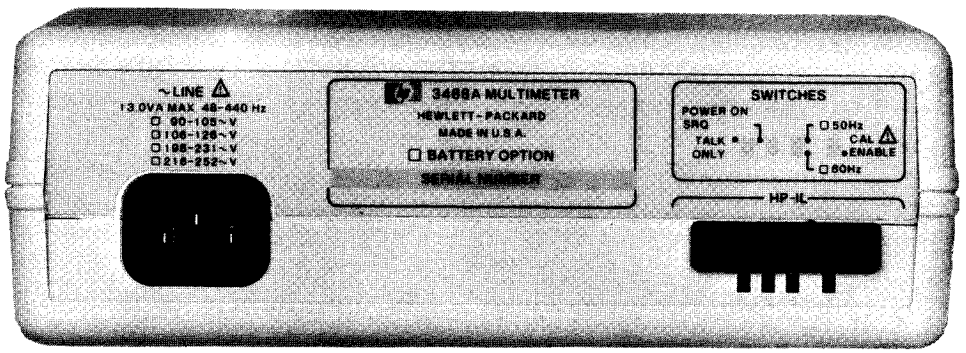

Figure 5-1. 3468A Rear Panel

Grounding Requirements

To minimize shock hazard, the instrument chassis and cabinet must be connected to an electrical ground. The instrument is equipped with a three-conductor ac power cable. The power cable must either be plugged into an approved three-contact electrical outlet or used with a three-contact to two-contact adapter with the grounding wire (green) firmly connected to an electrical ground (safety ground) at the power outlet. The power jack and mating plug of the supplied power cable meet International Electrotechnical Commission (IEC) safety standards.

Power Cords and Receptacles

Figure 5-2 illustrates the different power cord configurations that are available to provide ac power to the 3468A. The -hp- part number shown directly below the individual power plug drawing is the part number for the power cord set equipped with the appropriate mating plug for that receptacle. If the appropriate power cord is not included with the instrument, notify the nearest -hp- Sales and Service office.

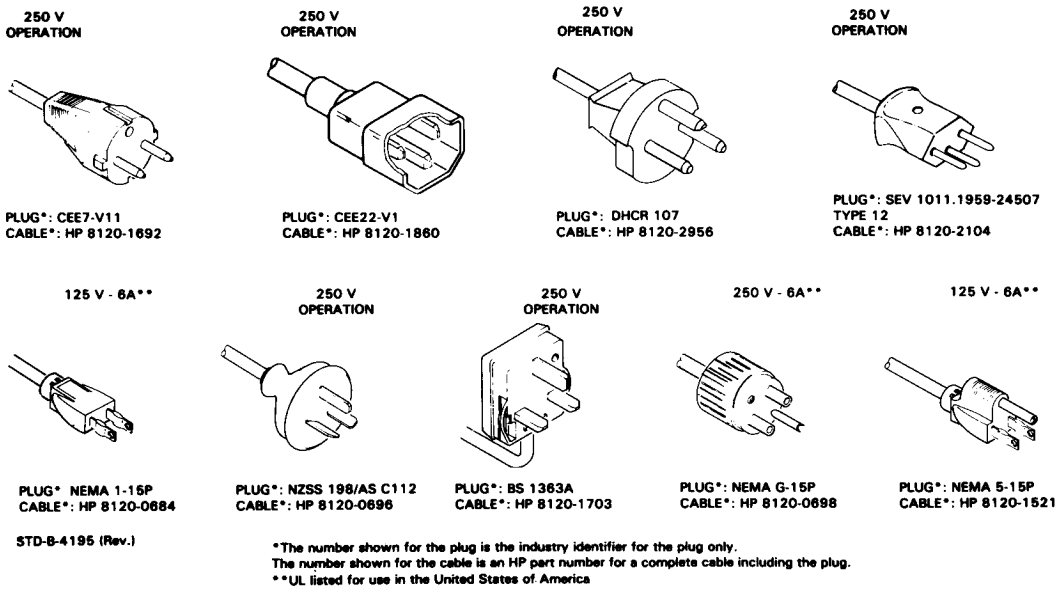

Figure 5-2. Power Cables

Bench Use

The 3468A is equipped with feet and Handle/Bail installed and is ready for use as a bench instrument. The 3468A display viewing angle is adjusted by pulling out on the Handle/Bail and rotating to a convenient position.

Safety Considerations

General safety precautions must be adhered to during all phases of operation of the 3468A. Failure to comply with these precautions or with specific warnings elsewhere in this manual, violates safety standards of design, manufacture, and intended use of the instrument. Hewlett-Packard company assumes no liability for the customer's failure to comply with these requirements.

Operating personnel must not remove instrument covers. Component replacement must be made by qualified maintenance personnel. Do not operate the instrument in the presence of flammable gases or fumes. Operation of any electrical instrument in such an environment constitutes a definite safety hazard.

Warnings or cautions precede any potentially dangerous procedures throughout this manual. Instructions contained in the warnings and cautions must be followed. Safety Symbols used on the instrument or in the manual include the following:

WARNING	The WARNING sign denotes a hazard. It calls attention to a procedure, practice, condition, or the like, which, if not correctly performed or adhered to, could result in injury or death to personnel.
CAUTION	The CAUTION sign denotes a hazard. It calls attention to an operating procedure, practice, condition, or the like, which, if not correctly performed or adhered to could result in damage or destruction to all or part of the product.
NOTE	The NOTE sign denotes important information. It calls attention to a procedure, practice, condition, or the like, which is essential to highlight.
	Instruction Manual Symbol: the product will be marked with this symbol when it is necessary for the user to refer to the instruction manual in order to protect against damage to the instrument.
	Indicates dangerous voltage (terminals fed from the interior by voltage exceeding 1000 volts must be so marked).
	Alternating current.
	Direct current.

Environmental Requirements

When the 3468A is calibrated, careful note should be taken of the ambient temperature. In order to meet and maintain the specifications listed in Table 5-3, the 3468A should be operated within ± 5°C (± 9°F) of the calibration temperature, also called the reference temperature. As it comes from the factory, the 3468A should be operated within an ambient temperature range of 23°C ±5°C (73°F ±9°F). The instrument may be operated within an ambient temperature range of 0°C to 55°C (+32°F to 131°F) but with reduced accuracy.

WARNING

To prevent potential electrical or fire hazard, do not expose the multimeter to rain or moisture.

Specifications

The specifications for the 3468A are the performance characteristics of the instrument which are certified. These specifications are listed in Table 5-3, and are the performance standards or limits against which the multimeter is tested. Included in the table are some supplemental characteristics of the 3468A and should be considered as additional and general information for you, the user. Because of the many operational capabilities of the 3468A, exercise care when checking the instrument specifications.

Any changes in the specifications due to manufacturing changes, design, or traceability to the National Bureau of Standards will be covered in a manual change supplement.

Table 5-3. Specifications

DC VOLTAGE

Input Characteristics:

Range	Maximum Reading (5½ Digit)	Resolution 5½ Digit	4½ Digit	3½ Digit
.3V	±.301000V	1μV	10μV	100μV
3V	±3.01000V	10μV	100μV	1mV
30V	±30.1000V	100μV	1mV	10mV
300V	±301.000V	1mV	10mV	100mV

Input Resistance:

.3V, 3V ranges: $>10^{10}\Omega$
30V, 300V ranges: 10MΩ ± 1%

Maximum Input Voltage: (non-destructive)

Hi to Lo: 301 Vrms or 450V peak
Hi or Lo to Earth Ground: ±500V peak

Measurement Accuracy:

±(% of reading + number of counts)
Auto-zero ON

5½ Digit Mode:

Range	Cal. Temp ± 1°C 24 Hours	Cal. Temp. ±5°C 90 Day	1 Year
.3V	0.005 + 4	0.009 + 5	0.02 + 5
3V	0.0035 + 2	0.007 + 2	0.018 + 2
30V	0.005 + 3	0.009 + 3	0.02 + 3
300V	0.0055 + 2	0.009 + 2	0.02 + 2

4½ and 3½ Digit Mode:

Accuracy is the same as 5½ digit mode for % of reading; use 1 count for number of counts.

The Cal. Temp. (Calibration Temperature) is the temperature of the environment where the 3468A was calibrated. Calibration should be performed with the temperature of the environment between 20°C and 30°C.

Auto-Zero Off:

(5½ digit) for a stable environment (±1°C), for <24 hrs., add 11 counts to accuracy specification for .3V and 30V ranges, 3 counts for 3V and 300V ranges. For 4½ or 3½ digits, multiply counts by 0.1.

Temperature Coefficient:

0°C to (Cal. Temp. −5°C),(Cal. Temp. +5°C) to 55°C
5½ digit display, auto-zero ON
± (% of reading + number of counts)/°C

Range	Temperature Coefficient
.3V, 30V	0.0008 + .5
3V, 300V	0.0007 + .05

Noise Rejection:

In dB, with 1kΩ imbalance in Lo lead. AC rejection for 50, 60Hz ± 0.1%. Auto-zero ON.

Display	AC NMR	AC ECMR	DC CMR
5½ digits	80	150	140
4½ digits	59	130	140
3½ digits	0	70	140

Maximum Reading Rates: (readings/sec)

First reading is correct within .1 count of final value, when on correct range, triggered coincident with step input.

The reading rates are dependent on the speed of the controller being used.

Line Frequence	Auto Zero	Resolution 3½ Digits	4½ Digits	5½ Digits
60Hz	Off	32	21	3.7
	On	25	13.4	2
50Hz	Off	32	19	3.1
	On	25	.12	1.7

Maximum Reading Rate with 41CV:

2 readings/sec

Display Rate: (readings/sec)

For 50 or 60 Hz operation.

	5½ Digits	4½ or 3½ Digits
Auto Zero off	4	4
Auto Zero On	2	4

RESISTANCE (2-wire Ω, 4-wire Ω)

Input Characteristics:

Range	Maximum Reading (5½ Digit)	Resolution 5½ Digit	4½ Digit	3½ Digit
300 Ω	301.000 Ω	1mΩ	10mΩ	100mΩ
3 kΩ	3.01000 kΩ	10mΩ	100mΩ	1 Ω
30 kΩ	30.1000 kΩ	100mΩ	1 Ω	10 Ω
300 kΩ	301.000 kΩ	1 Ω	10 Ω	100 Ω
3MΩ	3.01000MΩ	10 Ω	100 Ω	1 kΩ
30MΩ	30.1000MΩ	100 Ω	1 kΩ	10 kΩ

Input Protection: (non-destructive)

Hi source to Lo source: ±350V peak
Hi sense to Lo sense: ±350V peak
Hi or Lo to Earth Ground: ±500V peak

Measurement Accuracy:

±(% of reading + number of counts)
Auto-zero ON. 4-wire ohms.

5½ Digit Mode:

Range	Cal. Temp ± 1°C 24 Hours	Cal. Temp. ±5°C 90 Day	1 Year
300Ω	0.0045 + 4	0.012 + 5	0.017 + 5
3k – 300kΩ	0.0035 + 2	0.011 + 2	0.016 + 2
3MΩ	0.0052 + 2	0.011 + 2	0.016 + 2
30MΩ	0.036 + 2	0.066 + 2	0.078 + 2

Table 5-3. Specifications (Cont'd)

RESISTANCE (2-wire Ω, 4-wire Ω) (Cont'd)

2-Wire Ohms Accuracy:

Same as 4-wire ohms, except add a maximum of 100mΩ offset.

Auto-Zero Off:

(5½ digit) for a stable environment (±1°C), for <24 hrs., add 11 counts to accuracy specification for 300Ω range 3 counts for 3kΩ through 300kΩ ranges, 8 counts for 3MΩ range, and 33 counts for 30MΩ range.

Temperature Coefficient:

0°C to (Cal. Temp. −5°C),(Cal. Temp. +5°C) to 55°C
5½ digit display, auto-zero ON
± (% of reading + number of counts)/°C

Range	Temperature Coefficient
300Ω	0.0009 + 0.5
3k−300kΩ	0.0009 + 0.05
3MΩ	0.0021 + 0.05
30MΩ	0.021 + 0.05

Current Through Unknown:

Range:	300Ω	3kΩ	30kΩ	300kΩ	3MΩ	30MΩ
Current:	1mA	1mA	100μA	10μ	1μ	100nA

Maximum Open Circuit Voltage:

6.5V

Maximum Reading Rates:

Same as dc volts, except for 3MΩ and 30MΩ ranges. For 3MΩ range, add 20ms; for 30MΩ range, add 200ms per reading.

AC VOLTAGE (true rms responding)

Input Characteristics:

Range	Maximum Reading (5½ Digit)	Resolution 5½ Digit	4½ Digit	3½ Digit
.3V	.301000V	1μV	10μV	100μV
3V	3.01000V	10μV	100μV	1mV
30V	30.1000V	100μV	1mV	10mV
300V	301.000V	1mV	10mV	100mV

Input Impedance:

1MΩ ± 1% shunted by <60pF

Maximum Input Voltage: (non-destructive)

Hi to Lo: 301Vrms or 450V peak
Hi or Lo to Earth Ground: ±500V peak

Measurement Accuracy:

±(% of reading + number of counts)
Auto-zero ON. 5½ digit display. Accuracy is specified for sine-wave inputs only, >10% of full scale.
1 Year, Cal. Temp. ±5°C

Frequency	Ranges .3V	3V, 30V	300V
20Hz-50Hz	1.14 + 163	1.14 + 102	1.18 + 102
50Hz−100Hz	0.46 + 163	0.46 + 103	0.5 + 102
100Hz−20kHz	0.29 + 163	0.26 + 102	0.33 + 102
20kHz−50kHz	0.56 + 247	0.41 + 180	0.55 + 180
50kHz−100kHz	1.74 + 882	1.05 + 825	1.26 + 825
100kHz−300kHz		10.1 + 3720 (30V range only)	

Auto-Zero Off:

(5½ digits) for a stable environment (±1°C), for <24 hrs., add 10 counts to accuracy specifications for all ranges.

Temperature Coefficient:

0°C to (Cal. Temp. −5°C),(Cal. Temp. +5°C) to 55°C,
5½ digit display, auto-zero ON.
For frequencies <20kHz, ±(0.016% of reading + 10 counts)/°C
For frequencies >20kHz, ±(0.04% of reading + 10 counts)/°C

Crest Factor:

>4:1 at full scale.

Common Mode Rejection:

With 1kΩ imbalance in Lo lead, >70dB, dc to 60Hz.

Maximum Reading Rates: (readings/sec)

First reading is correct within 70 counts of final value, when on correct range, triggered coincident with step input. Add 0.6 seconds for each range change.

For 50 or 60Hz operation, auto-zero ON or OFF.
3½ or 4½ digits: 1.4 readings/sec
5½ digits: 1.0 readings/sec

DC CURRENT

Input Characteristics:

Range	Maximum Reading (5½ Digit)	Resolution 5½ Digit	4½ Digit	3½ Digit
3A	±3.01000A	10μA	100μA	1mA

Maximum Input: (non-destructive)

3A from <250V source; fuse protected

Measurement Accuracy:

± (% of reading + number of counts)
Auto-zero ON. 5½ digit display.

Range	Cal. Temp. ±5°C 90 Days	1 Year
3A, <1A input	0.14 + 6	0.17 + 6
3A, >1A input	1.0 + 30	1.0 + 30

Table 5-3. Specifications (Cont'd)

DC CURRENT (Cont'd)

Auto-Zero Off:

(5½ digit) for a stable environment (±1°C), for <24 hrs., add 11 counts to accuracy specification for 5½ digit mode.

Temperature Coefficient:

0°C to (Cal. Temp. −5°C),(Cal. Temp. +5°C) to 55°C
5½ digit display, auto-zero ON
± (0.012 of reading + 0.5 counts)/°C

Maximum Burden at Full Scale:

1V

Maximum Reading Rates:

Same as dc volts

AC CURRENT (true rms responding)

Input Characteristics:

Range	Maximum Reading (5½ Digit)	Resolution 5½ Digit	4½ Digit	3½ Digit
.3A	.301000A	1μA	10μA	100μA
3A	3.01000A	10μA	100μA	1mA

Maximum Input: (non-destructive)

3A from <250V source; fuse protected

Measurement Accuracy:

± (% of reading + number of counts)
Auto-zero ON. 5½ digit display. Accuracy specified for sine-wave inputs only >10% of full scale.
1 YEAR, CAL. TEMP. ±5°C

Frequency	Ranges 300mA	3A
20Hz−50Hz	1.77 + 163	2.5 + 163
50Hz−1kHz	1.1 + 163	1.8 + 163
1kHz−10kHz	1.0 + 163	1.7 + 163
10kHz−20kHz	1.14 + 163	1.84 + 163

Auto-zero Off:

(5½ digits) for a stable environment (±1°C), for <24 hrs., add 10 counts to accuracy specification.

Temperature Coefficient:

0°C to (Cal. Temp. −5°C), (Cal. Temp. +5°C) to 55°C.
5½ digits, auto-zero ON.
± (0.021% of reading + 10 counts)/°C

Maximum Burden at Full Scale:

1V

Crest Factor:

>4:1 at full scale

Maximum Reading Rates:

Same as ac volts

GENERAL INFORMATION

Operating Temperature:

0 to 55°C

Humidity Range:

95% R.H., 0 to 40°C

Storage Temperature:

−40°C to 75°C
except for battery option, −40°C to +65°C

Warm-up Time:

1 hr. to meet all specifications.

Integration Time:

Number of Digits	Line Frequency 50Hz	60Hz
5½	200ms	166.7ms
4½	20ms	16.67ms
3½	2ms	1.667ms

Power:

AC Line 48−440Hz; 86−250V, (see configuration)

Battery: (Option 001)

Rechargeable lead-acid; minimum continuous operation for 5 hours at 25°C; recharge time is 16 hours with 3468A off and 36 hours with 3468A on.

Maximum Power:

<13 VA

Size:

98.4mm H x 238.1mm W x 276.2mm D
(3.88 in H x 9.38 in W x 10.88 in D)

Weight:

3468A - 2.1 kg (4.63 lbs.)
3468A with Option 001 - 3.1 kg (6.83 lbs.)

Interface Connections

The -hp- Model 3468A is compatible with the Hewlett-Packard Interface Loop (HP-IL). HP-IL is an easy to use interface that allows interaction and control between the -hp- 41 family of calculators and instruments such as the 3468A. Instruments are connected together in series, forming the "loop". Refer to Appendix A for specific information regarding HP-IL.

The 3468A may be connected at any point in the loop. Refer to Figure 5-3. HP-IL connections to the 3468A are by two cables, one going to the previous instrument in the loop (IN) and the other going to the next instrument (OUT). All of the interface cables must form a continuous loop. All connectors are designed for proper orientation. To connect a device such as the 3468A, first turn off the calculator and the device to be added to the loop. Then, disconnect the loop in one place and connect the 3468A into the loop at that place. All devices must be turned on for the interface to work properly. The calculator assigns new addresses to each device at turn-on. Total cable length between any two consecutive devices in the loop must not exceed 10 meters (33 feet) for standard cable.

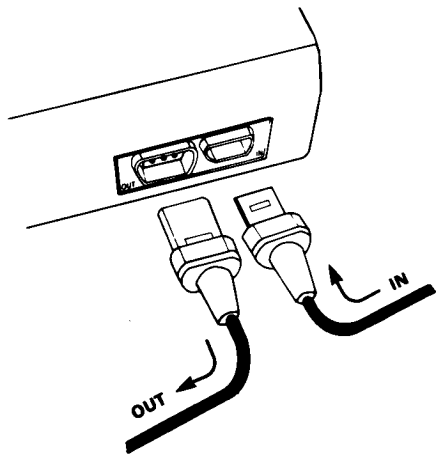

Figure 5-3. Typical HP-IL System Interconnection

Address Selection

Each device in the loop is assigned a unique address - a number from 1 to 30 - allowing the controller to specify and control individual devices. The 3468A has a default address of 22, however, the system controller (calculator) is able to assign new, sequential addresses to each device in the loop. These addresses start with address 1 for the first device in the loop after the calculator in the direction of information transfer. In this way, each device has an unique address, which the device stores internally.

Fuse Replacement

Amps Terminal Fuse

The Amps terminal fuse is located physically inside the Amps (A) terminal on the multimeter front panel. To replace the fuse, first remove the cable from the Amps terminal and then turn the power off to the multimeter. Use the side slots on the

"A" terminal to rotate the terminal counterclockwise. The terminal and fuse will protrude from the front panel. Remove the terminal and fuse, replace the fuse with a 3A/250V rated fuse, -hp- part number 2110-0003. Return the terminal and fuse to the front panel.

Power Line Fuse

The power line fuse is located on the rear panel of the 3468A and should be replaced only be qualified service trained personnel.

In Case of Trouble

If at any time you suspect that the 3468A is malfunctioning, perform the self test as follows:

press: [ ] [SGL TRIG] (TEST/RESET)

This initiates the functional self test of the 3468A. The self test starts by turning on every segment in the display (except the top dot on the colon) for about 2 seconds, blinks and repeats. Following this the self test actually begins with any discrepancies noted in the display. If there are no self test failures, the 3468A returns to its power-on state. See Chapter II for a complete discussion on the Self Test.

If the Voltmeter self test fails, the display is blank, or it will not respond to the front panel keys (3468A not in REMOTE mode), turn the multimeter off and perform the following steps.

1. Remove all cables.

2. Check the Line Voltage option marking on the rear panel of the 3468A to ensure that it is set to the correct nominal line voltage in your area (i.e., 110, 120, 220, or 240 Vac).

3. Have a qualified service trained technician check the line fuse.

4. Check the AC power cord and plug it into the AC receptacle on the 3468A.

5. Turn the 3468A on. Watch the display. At turn-on the multimeter should display SELF TEST OK, and then begin to take readings in the dc volts mode. If any part of the self test should fail an error message will be shown in the display.

6. If the display does not return or if the self test fails again, the 3468A requires service. Call your local -hp- Sales and Service Office. A list of offices is provided in the back of this manual.

Warranty Information

Certification

Hewlett-Packard Company certifies that this product met its published specifications at the time of shipment from the factory. Hewlett-Packard further certifies that its calibration measurements are traceable to the United States National Bureau of Standards, to the extent allowed by the Bureau's calibration facility, and to the calibration facilities of other International Standards Organization members.

Warranty

This Hewlett-Packard product is warranted against defects in material and workmanship for a period of one year from date of shipment. During the warranty period, Hewlett-Packard Company will, at its option, either repair or replace products which prove to be defective.

For warranty service or repair, this product must be returned to a service facility designated by -hp-. Buyer shall prepay shipping charges to -hp- and -hp- shall pay shipping charges to return the product to Buyer. However, Buyer shall pay all shipping charges, duties, and taxes for products returned to -hp- from another country.

Hewlett-Packard warrants that its software and firmware designated by -hp- for use with an instrument will execute its programming instructions when properly installed on that instrument. Hewlett-Packard does not warrant that the operation of the instrument, or software, or firmware will be uninterrupted or error free.

Limitation of Warranty

The foregoing warranty shall not apply to defects resulting from improper or inadequate maintenance by Buyer, Buyer-supplied software or interfacing, unauthorized modification or misuse, operation outside of the environmental specifications for the product, or improper site preparation or maintenance.

NO OTHER WARRANTY IS EXPRESSED OR IMPLIED. HEWLETT-PACKARD SPECIFICALLY DISCLAIMS THE IMPLIED WARRANTIES OF MERCHANTABILITY AND FITNESS FOR A PARTICULAR PURPOSE.

Exclusive Remedies

THE REMEDIES PROVIDED HEREIN ARE BUYER'S SOLE AND EXCLUSIVE REMEDIES. HEWLETT-PACKARD SHALL NOT BE LIABLE FOR ANY DIRECT, INDIRECT, SPECIAL, INCIDENTAL, OR CONSEQUENTIAL DAMAGES, WHETHER BASED ON CONTRACT, TORT, OR ANY OTHER LEGAL THEORY.

Assistance

Product maintenance agreements and other customer assistance agreements are available for Hewlett-Packard products.

For any assistance, contact your nearest Hewlett-Packard Sales and Service Office. Addresses are provided in the back of this manual.

How to Obtain Repair Service

Most -hp- service offices in the United States are NOT authorized to service and repair 3468A DMM's. Notify your local -hp- sales office for specific information on where to send the instrument for repair. This will substantially reduce turn-around time. You may have your 3468A repaired at a Hewlett-Packard repair center anytime it needs service, whether the instrument is under warranty or not. There is a charge for repairs after the one year warranty period. A list of offices is conveniently provided in the back of this manual.

Serial Number

Each 3468A multimeter carries its own serial number on a plate on the rear panel. It is recommended that owners keep a separate record of this number. Should your unit be lost or stolen, the complete serial number is often necessary for tracing and recovery, as well as any insurance claims.

General Shipping Instructions

Should you ever need to ship your 3468A, be sure it is packaged in a protective package (use the original shipping container and cushioning material) to avoid in-transit damage. Such damage is not covered by the warranty. Hewlett-Packard suggests that you always insure shipments. Attach a tag to the instrument identifying the owner and indicating the service or repair needed. Include the model number and full serial number of the instrument. In any correspondence, identify the instrument by model number and full serial number.

Further Considerations

Cleaning

Disconnect the 3468A from its ac power source before cleaning. The multimeter can be cleaned with a soft cloth dampened either in clean water or in water containing a mild detergent. Do not use an excessively wet cloth, or allow water inside the instrument. Do not use any abrasive cleaners, especially on the display. Do not press too hard on the display. The panel area surrounding the input terminals should not be touched because oils on the surface caused by finger prints may cause leakage paths and decrease the input impedance. To maintain the high input impedance of the multimeter, the input terminal area should be cleaned periodically with a cotton swab dipped in isopropyl alcohol.

Appendix A

Introduction

Hewlett-Packard Interface Loop (HP-IL) is a two wire interface that permits communication from one device or instrument to another. As the name implies, devices are connected in a serial loop structure. Data or information, in the form of digital messages, travels from one device to the next around the loop. The following discussion is controller independent but, where appropriate, is dependent on the 3468A.

General HP-IL Description

The interface loop consists of a calculator/controller and up to 30 peripheral devices such as the 3468A, printer/plotters, etc. Maximum cable length from one device to the next should not exceed 10 meters to maintain noise immunity. Information is transferred from one device to the next around the loop. If the information is not intended for a particular device (see paragraph on addressing), the device merely passes the information on to the next device in the loop. When the information reaches the intended device, the device responds as directed by the information. In this way, the calculator/controller can send information to and receive information from selected devices in the loop according to the devices capabilities. Figure A-1 shows a typical interface loop system.

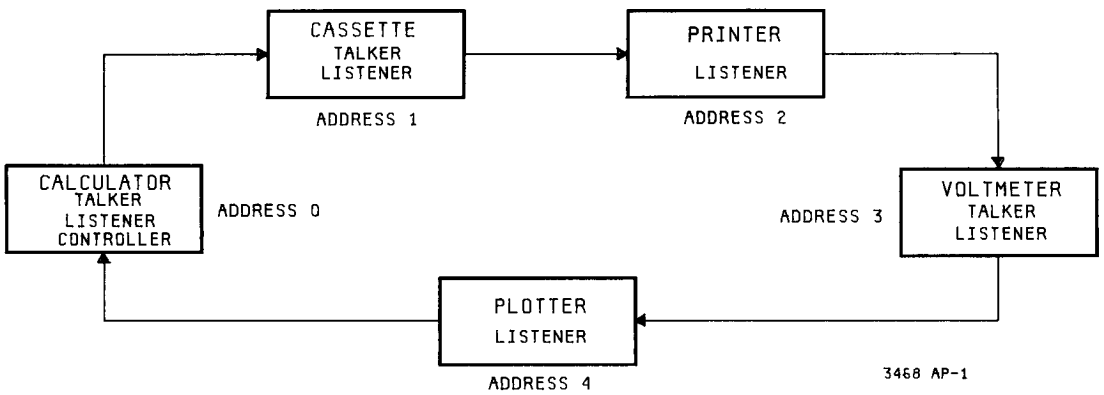

Figure A-1. Typical HP-IL System

Functional Overview

Each device in the loop may possess one or more of the three basic device capabilities: Controller, Talker, or Listener. The controller, as the name implies, has the responsibility to control loop activity. The -hp- Model 41C/41CV handheld calculator and the -hp- Model 85 desktop computer are examples of devices which can be used as controllers. They must, of course, be equipped with the proper interface module. Controllers transmit all commands to other devices in the loop and have Talker and Listener capabilities. The 3468A cannot serve as a controller. Only one device in the loop may serve as a controller.

Talkers are devices that have the ability to send data or information (but not commands) through the loop. Note that a talker will not actually send its data or information until told to do so by the controller. The 3468A has Talker capabilities. When the 3468A is talking on the loop its TLK annunciator will turn on. In special situations, one device may be classified as a Talk-only device and sends information to Listen-only devices. Such a system would not have a controller. For example, the 3468A can be configured for Talk-only mode and send measurement results to a printer.

Listeners are devices with the capability to receive information over the loop. When the 3468A is "listening", its LSTN annunciator turns on. Listeners must remain inactive until instructed by the controller to receive the information.

Addressing

Each device in the loop is assigned an address by the controller. The assigned address will probably be different than the factory preset address. The 3468A, for example, has a preset address of 22. If the 3468A is the only device in the loop with the controller, the controller will assign it an address of "1". The address permits the controller to specify or select a particular device in the loop when sending commands. Addresses are assigned to devices sequentially around the loop in the direction of information flow. The first device after the controller is assigned an address of "1". The second device is assigned the address "2", and so on around the loop.

Look at Figure A-1 again. The devices are shown with their basic capabilities, loop address, and direction of information flow.

HP-IL System Terms

The following paragraphs define the terms and concepts used to describe HP-IL system operations.

a. Address: Each device in the loop is assigned an address by the controller. The address is used to specify which device in the loop will receive information or send information.

b. Byte: A byte is a unit of information consisting of 8 binary digits called bits.

c. Device: Any instrument or unit that is HP-IL compatible is called a device.

d. Device Dependent: An action a device performs in response to information sent through the loop. The action is characteristic of a particular instrument and will probably vary from device to device.

e. Frame: Messages are sent through the loop as a sequence of eleven bits called a message "frame".

f. Polling: Polling is a process typically used by a controller to locate a device that has requested service from the controller. There are two types of polling, Serial Poll and Parallel Poll:

   1. Serial Poll. When the controller executes a serial poll, the addressed device sends one byte of operational information called a status byte. If more than one device in the loop is capable of requesting service, each device in the loop must be serial polled until the device that requested service is located.

   2. Parallel Poll. This method obtains a status bit from eight devices in the loop. The 3468A does not respond to a parallel poll.

Messages

Every message sent through the loop is sent as a sequence of eleven bits called a message frame. Commands, such as Listen, are made up of one or more message frames. The first bit in each message frame is a sync bit and is specially coded so that each device can recognize the beginning of a frame. The sync bit and the two following bits are called control bits and are used to determine the classification of the message frame. There are three major classifications of frames: Command, Ready, and Data. The remaining eight bits are the data bits and specify the particular message within the classification.

Normally only one message is in transit around the loop at any given time. In general, when a device sources a message it waits until the message goes completely around the loop and returns before transmitting the next message. This is part of a process called loop handshaking and guarantees that talkers and controllers do not send messages faster than other devices can accept them. It also provides an excellent error-checking capability. Each message must pass through each device. When a device receives a message, it does not pass it on to the next device until it is ready to receive the next message. Consequently, when the message returns to the sourcing device, it knows for certain that all devices in the loop have received the message and are ready for the next.

3468A Loop Capabilities

The following table lists the HP-IL functional subsets that the 3468A responds to and uses.

R	The 3468A handshakes as a receiver
D	Handshakes as a driver to the next device
AH	Handshakes as an acceptor
SH1	Handshakes as a source
T1,2,3,5,6	Basic Talker, Send Status, Send Device ID, Talk Only, and unaddressed as a Talker when addressed to Listen
TE0	No extended Talker capability
L1,3	Basic Listener and unaddressed to Listen when addressed to Talk
LE0	No extended Listener capability
C0	The 3468A cannot serve as a controller
AA1	Can be autoaddressed by the controller
AE0	No extended addressing capability
AM0	No multiple addressing capability
DC2	The 3468A responds to a Device Clear and Selected Device Clear
DT1	The 3468A responds to a Device Trigger
RL2	Basic Remote, Local, and Local Lockout capability
SR2	Basic Service Request and Asynchronous Service Request capability
PP0	The 3468A does not respond to a parallel Poll
MS1	The 3468A does have a manual Service Request
PD0	The 3468A does not have a power-down capability
DD0	The 3468A does not implement device dependent Talker or Listener commands

Appendix B
ASCII Table

ASCII Char.	EQUIVALENT FORMS Binary	Octal	Dec.	ASCII Char.	EQUIVALENT FORMS Binary	Octal	Dec.	ASCII Char.	EQUIVALENT FORMS Binary	Octal	Dec.	ASCII Char.	EQUIVALENT FORMS Binary	Octal	Dec.
NULL	00000000	000	0	space	00100000	040	32	@	01000000	100	64	`	01100000	140	96
SOH	00000001	001	1	!	00100001	041	33	A	01000001	101	65	a	01100001	141	97
STX	00000010	002	2	"	00100010	042	34	B	01000010	102	66	b	01100010	142	98
ETX	00000011	003	3	#	00100011	043	35	C	01000011	103	67	c	01100011	143	99
EOT	00000100	004	4	$	00100100	044	36	D	01000100	104	68	d	01100100	144	100
ENQ	00000101	005	5	%	00100101	045	37	E	01000101	105	69	e	01100101	145	101
ACK	00000110	006	6	&	00100110	046	38	F	01000110	106	70	f	01100110	146	102
BELL	00000111	007	7	'	00100111	047	39	G	01000111	107	71	g	01100111	147	103
BS	00001000	010	8	(	00101000	050	40	H	01001000	110	72	h	01101000	150	104
HT	00001001	011	9	)	00101001	051	41	I	01001001	111	73	i	01101001	151	105
LF	00001010	012	10	*	00101010	052	42	J	01001010	112	74	j	01101010	152	106
V_{TAB}	00001011	013	11	+	00101011	053	43	K	01001011	113	75	k	01101011	153	107
FF	00001100	014	12	,	00101100	054	44	L	01001100	114	76	l	01101100	154	108
CR	00001101	015	13	-	00101101	055	45	M	01001101	115	77	m	01101101	155	109
SO	00001110	016	14	.	00101110	056	46	N	01001110	116	78	n	01101110	156	110
SI	00001111	017	15	/	00101111	057	47	O	01001111	117	79	o	01101111	157	111
DLE	00010000	020	16	0	00110000	060	48	P	01010000	120	80	p	01110000	160	112
DC_1	00010001	021	17	1	00110001	061	49	Q	01010001	121	81	q	01110001	161	113
DC_2	00010010	022	18	2	00110010	062	50	R	01010010	122	82	r	01110010	162	114
DC_3	00010011	023	19	3	00110011	063	51	S	01010011	123	83	s	01110011	163	115
DC_4	00010100	024	20	4	00110100	064	52	T	01010100	124	84	t	01110100	164	116
NAK	00010101	025	21	5	00110101	065	53	U	01010101	125	85	u	01110101	165	117
SYNC	00010110	026	22	6	00110110	066	54	V	01010110	126	86	v	01110110	166	118
ETB	00010111	027	23	7	00110111	067	55	W	01010111	127	87	w	01110111	167	119
CAN	00011000	030	24	8	00111000	070	56	X	01011000	130	88	x	01111000	170	120
EM	00011001	031	25	9	00111001	071	57	Y	01011001	131	89	y	01111001	171	121
SUB	00011010	032	26	:	00111010	072	58	Z	01011010	132	90	z	01111010	172	122
ESC	00011011	033	27	;	00111011	073	59	[	01011011	133	91	{	01111011	173	123
FS	00011100	034	28	<	00111100	074	0		01011100	134	92	|	01111100	174	124
GS	00011101	035	29	=	00111101	075	61	]	01011101	135	93	}	01111101	175	125
RS	00011110	036	30	>	00111110	076	62		01011110	136	94	~	01111110	176	126
US	00011111	037	31	?	00111111	077	63	—	01011111	137	95	DEL	01111111	177	127

INDEX

Page

A

Abnormal multimeter readings 13
Accessories 83
AC
  current 11
  volts 27/28
Address (HP-IL) 5/6,30,64,65,92,98,99
Amps terminal 5/6,11
Annunciators 16
ASCII character set 101
Autorange 5/6,20
  hysteresis 21
Autozero 5/6,8,18
AUTOIO 35,44,45

B

Binary Status 82
Building Blocks Program 47

C

Calibration 5/6,10
Cleaning 96
CLEAR 68
CLEAR LOCKOUT/SET LOCAL 69
Current measurements 11

D

Data
  message 67
  ready SRQ 40,73
Data Logger Program 57
dBm measurement program 51,81
DC
  current 11
  volts 27/28
Display 5/6,12,19
  digits 5/6,14
  messages 13
  normal 12
  user generated messages 14

E

Environment
  environmental requirements 88
  signal environments 17
Extended Ohms 23,49,79

F

FINDID 35,43
Format, output 36,67
Four-wire ohms measurements 23
Fuse replacement 92

H

Hints, programming 33,66
HP-IL 29,97
  general description 29
  interface connections 92
  program codes 61

I

IND 35,36
Initialization Program 45
Input terminals 5/6
INSTAT 35,38
Integration 17
Internal trigger 26

L

Line voltage selection 84
LISTEN 35,37
LOCAL 69
LOCAL LOCKOUT 69

M

MANIO 35,43
Manual ranging 5/6,20
Measurement Function keys 5/6
Messages 13,99
  display 13
  self test 13,25
  user generated 14

N

Normal display 12

O

Operating characteristics 7
Optimizing reading rates 17
OUTA 35,36
Output format 36,67

P

Programming hints 33,66

R

Range (ranging) 19
  key 5/6,19
Reading rate 8,17
Rear panel 21
  switches 21
REMOTE 35,37,70
REQUIRE SERVICE (SRQ) 39,71
Repair Service 95
Resistance measurements 22
  2-wire 22
  4-wire 23
  extended ohms 23,49,79

INDEX (Cont'd)

S

Safety considerations **87**
SELECT 35,**42**
SENSE terminals 5/6
SERIAL POLL **75**,99
Shift 5/6
Signal environment 17
Single trigger 26
Specifications **88,89**
SRQ 39,40,41,**71**
  key 5/6
  mask 39,**72**
Statistics Programming **54**
Status byte 38,39,**72,82**
Status register 39,**72**

T

Talk-only mode 35
Temperature measurement program **52,80**
Test/reset **25**
Trigger **26**
  internal 26
  single 26
Trouble, in case of **93**
TURNING IT ON **4**
Two-wire ohms measurements 22

U

User generated messages **14**

V

Voltage measurements **27/28**

W

Warranty **94**

SALES & SUPPORT OFFICES

Arranged alphabetically by country

Product Line Sales/Support Key

Key	Product Line
A	Analytical
CM	Components
C	Computer Systems
CP	Computer Systems Primary Service Responsible Office (SRO)
CS	Computer Systems Secondary SRO
E	Electronic Instruments & Measurement Systems
M	Medical Products
MP	Medical Products Primary SRO
MS	Medical Products Secondary SRO
P	Personal Computing Products
*	Sales only for specific product line
**	Support only for specific product line

IMPORTANT: These symbols designate general product line capability. They do not insure sales or support availability for all products within a line, at all locations. Contact your local sales office for information regarding locations where HP support is available for specific products.

HP distributors are printed in italics.

ANGOLA

Telectra
Empresa Técnica de Equipamentos Eléctricos, S.A.R.L.
R. Barbosa Rodrigues, 41-I DT.
Caixa Postal 6487
LUANDA
Tel: 35515,35516
A,E,M,P*

ARGENTINA

Hewlett-Packard Argentina S.A.
Avenida Santa Fe 2035
Martinez 1640 **BUENOS AIRES**
Tel: 798-5735, 792-1293
Telex: 122443 AR CIGY
Cable: HEWPACKARG
A,E,CP,P

Biotron S.A.C.I.y.M
Avenida Paseo Colon 221
9 Piso
*1399 **BUENOS AIRES***
Tel: 30-4846, 30-1851, 30-8384
Telex: (33)17595 BIONAR
Cable: BIOTRON Argentina
M

Fate S.A. Electronica
Bartolomeu Mitre 833
*1036 **BUENOS AIRES***
Tel: 74-41011, 74-49277, 74-43459
Telex: 18137, 22754
P

AUSTRALIA

Adelaide, South Australia Pty. Ltd.

Hewlett-Packard Australia Pty.Ltd.
153 Greenhill Road
PARKSIDE, S.A. 5063
Tel: 272-5911
Telex: 82536
Cable: HEWPARD Adelaide
A*,CM,CS,E,MS,P

Brisbane, Queensland Office

Hewlett-Packard Australia Pty.Ltd.
5th Floor
Teachers Union Building
495-499 Boundary Street
SPRING HILL, Queensland 4000
Tel: 229-1544
Telex: 42133
Cable: HEWPARD Brisbane
A,CM,CS,E,MS,P

Canberra, Australia Capital Office

Hewlett-Packard Australia Pty.Ltd.
121 Wollongong Street
FYSHWICK, A.C.T. 2069
Tel: 804244
Telex: 62650
Cable: HEWPARD Canberra
A*,CM,CS,E,MS,P

Melbourne, Victoria Office

Hewlett-Packard Australia Pty.Ltd.
31-41 Joseph Street
BLACKBURN, Victoria 3130
Tel: 89-6351
Telex: 31-024
Cable: HEWPARD Melbourne
A,CM,CP,E,MS,P

Perth, Western Australia Office

Hewlett-Packard Australia Pty.Ltd.
141 Stirling Highway
NEDLANDS, W.A. 6009
Tel: 386-5455
Telex: 93859
Cable: HEWPARD Perth
A,CM,CS,E,MS,P

Sydney, New South Wales Office

Hewlett-Packard Australia Pty.Ltd.
17-23 Talavera Road
NORTH RYDE, N.S.W. 2113
P.O. Box 308
Tel: 887-1611
Telex: 21561
Cable: HEWPARD Sydney
A,CM,CP,E,MS,P

AUSTRIA

Hewlett-Packard Ges.m.b.h.
Grottenhofstrasse 94
Verkaufsburo Graz
8052 **GRAZ**
Tel: 21-5-66
Telex: 32375
CM,C*,E*

Hewlett-Packard Ges.m.b.h.
Wehlistrasse 29
P.O. Box 7
A-1205 **VIENNA**
Tel: (222) 35-16-210
Telex: 135823/135066
A,CM,CP,E,MS,P

BAHRAIN

Green Salon
P.O. Box 557
BAHRAIN
Tel: 5503
Telex: 88419
P

Wael Pharmacy
P.O. Box 648
BAHRAIN
Tel: 54886, 56123
Telex: 8550 WAEL GJ
M

BELGIUM

Hewlett-Packard Belgium S.A./N.V.
Blvd de la Woluwe, 100
Woluwedal
B-1200 ***BRUSSELS***
Tel: (02) 762-32-00
Telex: 23-494 paloben bru
A,CM,CP,E,MP,P

BRAZIL

Hewlett-Packard do Brasil I.e.C. Ltda.
Alameda Rio Negro, 750
ALPHAVILLE 06400 Barueri SP
Tel: 421-1311
Telex: 011 23602 HPBR-BR
Cable: HEWPACK Sao Paulo
A,CM,CP,E,MS

Hewlett-Packard do Brasil I.e.C. Ltda.
Avenida Epitacio Pessoa, 4664
22471 **RIO DE JANEIRO**-RJ
Tel: 286-0237
Telex: 021-21905 HPBR-BR
Cable: HEWPACK Rio de Janeiro
A,CM,E,MS,P*

BURUNDI

Typomeca S.P.R.L.
B.P. 553
BUJUMBURA
Tel: 2659
P

CANADA

Alberta

Hewlett-Packard (Canada) Ltd.
210, 7220 Fisher Street S.E.
CALGARY, Alberta T2H 2H8
Tel: (403) 253-2713
Telex: 610-821-6141
A,CM,CP,E*,MS,P*

Hewlett-Packard (Canada) Ltd.
11620A-168th Street
EDMONTON, Alberta T5M 3T9
Tel: (403) 452-3670
Telex: 610-831-2431
A,CM,CP,E,MS,P*

British Columbia

Hewlett-Packard (Canada) Ltd.
10691 Shellbridge Way
RICHMOND, British Columbia
V6X 2W7
Tel: (604) 270-2277
Telex: 610-922-5059
A,CM,CP,E*,MS,P*

Manitoba

Hewlett-Packard (Canada) Ltd.
380-550 Century Street
WINNIPEG, Manitoba R3H 0Y1
Tel: (204) 786-6701
A,CM,CS,E,MS,P*

Nova Scotia

Hewlett-Packard (Canada) Ltd.
P.O. Box 931
900 Windmill Road
DARTMOUTH, Nova Scotia B2Y 3Z6
Tel: (902) 469-7820
Telex: 610-271-4482
CM,CP,E*,MS,P*

Ontario

Hewlett-Packard (Canada) Ltd.
552 Newbold Street
LONDON, Ontario N6E 2S5
Tel: (519) 686-9181
Telex: 610-352-1201
A,CM,CS,E*,MS,P*

Hewlett-Packard (Canada) Ltd.
6877 Goreway Drive
MISSISSAUGA, Ontario L4V 1M8
Tel: (416) 678-9430
Telex: 610-492-4246
A,CM,CP,E,MP,P

Hewlett-Packard (Canada) Ltd.
1020 Morrison Drive
OTTAWA, Ontario K2H 8K7
Tel: (613) 820-6483
Telex: 610-563-1636
A,CM,CP,E*,MS,P*

Quebec

Hewlett-Packard (Canada) Ltd.
17500 South Service Road
Trans-Canada Highway
KIRKLAND, Quebec H9J 2M5
Tel: (514) 697-4232
Telex: 610-422-3022
A,CM,CP,E,MP,P*

CHILE

Jorge Calcagni y Cia. Ltda.
Arturo Burhle 065
Casilla 16475
SANTIAGO 9
Tel: 220222
Telex: JCALCAGNI
A,CM,E,M

Olympia (Chile) Ltd.
Rodrico de Araya 1045
Casilla 256-V
SANTIAGO 21
Tel: 25-50-44
Telex: 40-565
C,P

COLOMBIA

Instrumentación
H. A. Langebaek & Kier S.A.
Apartado Aéreo 6287
BOGOTA 1, D.E.
Carrera 7 No. 48-75
BOGOTA, 2 D.E.
Tel: 287-8877
Telex: 44400
Cable: AARIS Bogota
A,CM,E,M,P

COSTA RICA

Cientifica Costarricense S.A.
Avenida 2, Calle 5
San Pedro de Montes de Oca
Apartado 10159
SAN JOSÉ
Tel: 24-38-20, 24-08-19
Telex: 2367 GALGUR
Cable: GALGUR
CM,E,M

CYPRUS

Telerexa Ltd.
P.O. Box 4809
14C Stassinos Avenue
NICOSIA
Tel: 45628
Telex: 2894
E,M,P

CZECHOSLOVAKIA

Hewlett-Packard
Obchodni Zastupitelstvi v CSSR
Post. schranka 27
*CS-118 01 **PRAHA 011***
Tel: 66-296
Telex: 121353 IHC

DENMARK

Hewlett-Packard A/S
Datavej 52
DK-3460 **BIRKEROD**
Tel: (02) 81-66-40
Telex: 37409 hpas dk
A,CM,CP,E,MS,P

Hewlett-Packard A/S
Navervej 1
DK-8600 **SILKEBORG**
Tel: (06) 82-71-66
Telex: 37409 hpas dk
CM,CS,E

ECUADOR

CYEDE Cia. Ltda.
P.O. Box 6423 CCI
Avenida Eloy Alfaro 1749
QUITO
Tel: 450-975, 243-052
Telex: 2548 CYEDE ED
Cable: CYEDE-Quito
A,CM,E,P

Hospitalar S.A.
Casilla 3590
Robles 625
QUITO
Tel: 545-250, 545-122
Cable: HOSPITALAR-Quito
M

EGYPT

Samitro
Sami Amin Trading Office
18 Abdel Aziz Gawish
ABDINE-CAIRO
Tel: 24-932
P

International Engineering Associates
24 Hussein Hegazi Street
Kasr-el-Aini
CAIRO
Tel: 23-829
Telex: 93830
E,M

Informatic For Computer Systems
22 Talaat Harb Street
CAIRO
Tel: 759006
Telex: 93938 FRANK UN
C

EL SALVADOR

IPESA
Boulevard de los Heroes
Edificio Sarah 1148
SAN SALVADOR
Tel: 252787
A,C,CM,E,P

FINLAND

Hewlett-Packard Oy
Revontulentie 7
SF-02100 **ESPOO** 10
Tel: (90) 455-0211
Telex: 121563 hewpa sf
A,CM,CP,E,MS,P

FRANCE

Hewlett-Packard France
Le Ligoures
Bureau de Vente de
Aix-en-Provence
Place Romée de Villeneuve
F-13090 **AIX-EN-PROVENCE**
Tel: (42) 59-41-02
Telex: 410770F
A,CM,CS,E,MS,P*

SALES & SUPPORT OFFICES

Arranged alphabetically by country

FRANCE (Cont.)

Hewlett-Packard France
Boite Postale No. 503
F-25026 **BESANCON**
28 Rue de la Republique
F-25000 **BESANCON**
Tel: (81) 83-16-22
C,M

Hewlett-Packard France
Bureau de Vente de Lyon
Chemin des Mouilles
Boite Postale No. 162
F-69130 **ECULLY** Cédex
Tel: (78) 33-81-25
Telex: 310617F
A,CM,CP,E,MP

Hewlett-Packard France
Immeuble France Evry
Tour Lorraine
Boulevard de France
F-91035 **EVRY** Cédex
Tel: (60) 77-96-60
Telex: 692315F
CM,E

Hewlett-Packard France
5th Avenue Raymond Chanas
F-38320 **EYBENS**
Tel: (76) 25-81-41
Telex: 980124 HP GRENOB EYBE
CM,CS

Hewlett-Packard France
Bâtiment Ampère
Rue de la Commune de Paris
Boite Postale 300
F-93153 **LE BLANC MESNIL**
Tel: (01) 865-44-52
Telex: 211032F
CM,CP,E,MS

Hewlett-Packard France
Le Montesquieu
Avenue du President JF Kennedy
F-33700 **MERIGNAC**
Tel: (56) 34-00-84
Telex: 550105F
CM,CP,E,MS

Hewlett-Packard France
32 Rue Lothaire
F-57000 **METZ**
Tel: (87) 65-53-50
CM,CS

Hewlett-Packard France
F-91947 Les Ulis Cédex**ORSAY**
Tel: (1) 907-78-25
Telex: 600048F
A,CM,CP,E,MP,P

Hewlett-Packard France
Paris Porte-Maillot 13, 15 25
Boulevard De L'Amiral Bruix
F-75782 **PARIS** Cédex 16
Tel: (01) 502-12-20
Telex: 613663F
CM,CP,MS,P

Hewlett-Packard France
2 Allee de la Bourgonette
F-35100 **RENNES**
Tel: (99) 51-42-44
Telex: 740912F
CM,CS,E,MS,P*

Hewlett-Packard France
4 Rue Thomas Mann
Boite Postale 56
F-67200 **STRASBOURG**
Tel: (88) 28-56-46
Telex: 890141F
CM,CS,E,MS,P*

Hewlett-Packard France
20 Chemin de la Cépière
F-31081 **TOULOUSE** Cédex
Tel: (61) 40-11-12
Telex: 531639F
A,CM,CS,E,P*

Hewlett-Packard France
Bureau de Vente de Lille
Immeuble Péricentre
Rue Van Gogh
F-59650 **VILLENEUVE D'ASQ**
Tel: (20) 91-41-25
Telex: 160124F
CM,CS,E,MS,P*

GERMAN FEDERAL REPUBLIC

Hewlett-Packard GmbH
Technisches Büro Berlin
Keithstrasse 2-4
D-1000 **BERLIN** 30
Tel: (030) 24-90-86
Telex: 018 3405 hpbln d
A,CM,CS,E,X,M,P

Hewlett-Packard GmbH
Technisches Büro Böblingen
Herrenberger Strasse 110
D-7030 **BÖBLINGEN**
Tel: (07031) 667-1
Telex: 07265739 bbn or 07265743
A,CM,CP,E,MP,P

Hewlett-Packard GmbH
Technisches Büro Dusseldorf
Emanuel-Leutze-Strasse 1
D-4000 **DUSSELDORF**
Tel: (0211) 5971-1
Telex: 085/86 533 hpdd d
A,CM,CP,E,MS,P

Hewlett-Packard GmbH
Vertriebszentrale Frankfurt
Berner Strasse 117
Postfach 560 140
D-6000 **FRANKFURT** 56
Tel: (0611) 50-04-1
Telex: 04 13249 hpffm d
A,CM,CP,E,MP,P

Hewlett-Packard GmbH
Technisches Büro Hamburg
Kapstadtring 5
D-2000 **HAMBURG** 60
Tel: (040) 63804-1
Telex: 21 63 032 hphh d
A,CM,CP,E,MS,P

Hewlett-Packard GmbH
Technisches Büro Hannover
Am Grossmarkt 6
D-3000 **HANNOVER** 91
Tel: (0511) 46-60-01
Telex: 092 3259
A,CM,CS,E,MS,P

Hewlett-Packard GmbH
Technisches Büro Mannheim
Rosslauer Weg 2-4
D-6800 **MANNHEIM**
Tel: (621) 70050
Telex: 0462105
A,C,E

Hewlett-Packard GmbH
Technisches Büro Neu Ulm
Messerschmittstrasse 7
D-7910 **NEU ULM**
Tel:
Telex:
C,E

Hewlett-Packard GmbH
Technisches Büro Nürnberg
Neumeyerstrasse 90
D-8500 **NÜRNBERG**
Tel: (0911) 56-30-83
Telex: 0623 860
CM,CS,E,MS,P

Hewlett-Packard GmbH
Technisches Büro München
Eschenstrasse 5
D-8021 **TAUFKIRCHEN**
Tel: (089) 6117-1
Telex: 0524985
A,CM,CP,E,MS,P

GREAT BRITAIN

Hewlett-Packard Ltd.
Trafalgar House
Navigation Road
ALTRINCHAM
Chesire WA14 1NU
Tel: (061) 928-6422
Telex: 668068
A,C,E,M

Hewlett-Packard Ltd.
Oakfield House, Oakfield Grove
Clifton
BRISTOL BS8 2BN
Tel: 36806
Telex: 444302
P

Hewlett-Packard Ltd.
14 Wesley Street
CASTLEFORD
Yorkshire WF10 1AE
Tel: (0977) 550016
Telex: 5557355
C

Hewlett-Packard Ltd.
Fourier House
257-263 High Street
LONDON COLNEY
Herts., AL2 1HA
Tel: (0727) 24400
Telex: 1-8952716
C,E

Hewlett-Packard Ltd
Tradax House, St. Mary's Walk
MAIDENHEAD
Berkshire, SL6 1ST
Tel: (0628) 39151
E,P

Hewlett-Packard Ltd.
308/314 Kings Road
READING, Berkshire
Tel: 61022
Telex: 84-80-68
CM,P

Hewlett-Packard Ltd.
Quadrangle
106-118 Station Road
REDHILL, Surrey
Tel: (0737) 68655
Telex: 947234 C,E

Hewlett-Packard Ltd.
Westminster House
190 Stratford Road
SHIRLEY, Solihull
West Midlands B90 3BJ
Tel: (021) 7458800
Telex: 339105
C

Hewlett-Packard Ltd.
King Street Lane
WINNERSH, Wokingham
Berkshire RG11 5AR
Tel: (0734) 784774
Telex: 847178
A,C,E,M

GREECE

Kostas Karaynnis
8 Omirou Street
***ATHENS** 133*
Tel: 32-30-303, 32-37-371
Telex: 21 59 62 RKAR GR
E,M,P

"Plaiso"
G. Gerados
24 Stournara Street
ATHENS
Tel: 36-11-160
Telex: 21 9492
P

GUATEMALA

IPESA
Avenida Reforma 3-48
Zona 9
GUATEMALA CITY
Tel: 316627, 314786, 664715
Telex: 4192 Teletro Gu
A,C,CM,E,M,P

HONG KONG

Hewlett-Packard Hong Kong, Ltd.
G.P.O. Box 795
5th Floor, Sun Hung Kai Centre
30 Harbour Road
HONG KONG
Tel: 5-8323211
Telex: 66678 HEWPA HX
Cable: HP ASIA LTD Hong Kong
E,CP,P

Schmidt & Co. (Hong Kong) Ltd.
Wing On Centre, 28th Floor
Connaught Road, C.
HONG KONG
Tel: 5-455644
Telex: 74766 SCHMX HX
A,M

ICELAND

Elding Trading Company Inc.
Hafnarnvoli-Tryggvagotu
P.O. Box 895
IS-REYKJAVIK
Tel: 1-58-20, 1-63-03
M

INDIA

Blue Star Ltd.
Bhavdeep
Stadium Road
***AHMEDABAD** 380 014*
Tel: 42932
Telex: 012-234
Cable: BLUEFROST
E

Blue Star Ltd.
11 Magarath Road
***BANGALORE** 560 025*
Tel: 55668
Telex: 0845-430
Cable: BLUESTAR
A,CM,C,E

Blue Star Ltd.
Band Box House
Prabhadevi
***BOMBAY** 400 025*
Tel: 422-3101
Telex: 011-3751
Cable: BLUESTAR
A,M

Blue Star Ltd.
Sahas
414/2 Vir Savarkar Marg
Prabhadevi
***BOMBAY** 400 025*
Tel: 422-6155
Telex: 011-4093
Cable: FROSTBLUE
A,CM,C,E,M

Blue Star Ltd.
7 Hare Street
***CALCUTTA** 700 001*
Tel: 12-01-31
Telex: 021-7655
Cable: BLUESTAR
A,M

Blue Star Ltd.
Meenakshi Mandiram
XXXXV/1379-2 M. G. Road
***COCHIN** 682-016*
Tel: 32069
Telex: 085-514
Cable: BLUESTAR
*A**

Blue Star Ltd.
133 Kodambakkam High Road
***MADRAS** 600 034*
Tel: 82057
Telex: 041-379
Cable: BLUESTAR
A,M

Blue Star Ltd.
Bhandari House, 7th/8th Floors
91 Nehru Place
***NEW DELHI** 110 024*
Tel: 682547
Telex: 031-2463
Cable: BLUESTAR
A,CM,C,E,M

Blue Star Ltd.
1-1-117/1 Sarojini Devi Road
***SECUNDERABAD** 500 033*
Tel: 70126
Telex: 0155-459
Cable: BLUEFROST
A,E

Blue Star Ltd.
T.C. 7/603 Poornima
Maruthankuzhi
***TRIVANDRUM** 695 013*
Tel: 65799
Telex: 0884-259
Cable: BLUESTAR
E

INDONESIA

BERCA Indonesia P.T.
P.O.Box 496/Jkt.
Jln. Abdul Muis 62
JAKARTA
Tel: 373009
Telex: 31146 BERSAL IA
Cable: BERSAL JAKARTA
A,C,E,M,P

BERCA Indonesia P.T.
P.O. Box 174/Sby.
J.L. Kutei No. 11
SUBAEE-SURABAYA
Tel: 68172
Telex: 31146 BERSAL SD
Cable: BERSAL-SURABAYA
A,E,M,P*

IRAQ

Hewlett-Packard Trading S.A.
Mansoor City 9B/3/7
BAGHDAD
Tel: 551-49-73
Telex: 2455 HEPAIRAQ IK
CP

IRELAND

Hewlett-Packard Ireland Ltd.
Kestrel House
Clanwilliam Court
Lower Mount Street
DUBLIN 2, Eire
Tel: 680424, 680426
Telex: 30439
A,C,CM,E,M,P

Cardiac Services Ltd.
Kilmore Road
Artane
***DUBLIN** 5, Eire*
Tel: (01) 351820
Telex: 30439
M

SALES & SUPPORT OFFICES

Arranged alphabetically by country

ISRAEL

Electronics Engineering Division
Motorola Israel Ltd.
16 Kremenetski Street
P.O. Box 25016
TEL-AVIV 67899
Tel: 338973
Telex: 33569 Motil IL
Cable: BASTEL Tel-Aviv
A,CM,C,E,M,P

ITALY

Hewlett-Packard Italiana S.p.A.
Traversa 99C
Giulio Petrone, 19
I-70124 **BARI**
Tel: (080) 41-07-44
M

Hewlett-Packard Italiana S.p.A.
Via Martin Luther King, 38/111
I-40132 **BOLOGNA**
Tel: (051) 402394
Telex: 511630
CM,CS,E,MS

Hewlett-Packard Italiana S.p.A.
Via Principe Nicola 43G/C
I-95126 **CATANIA**
Tel: (095) 37-10-87
Telex: 970291
C,P

Hewlett-Packard Italiana S.p.A.
Via G. Di Vittorio 9
I-20063 **CERNUSCO SUL NAVLIGLIO**
Tel: (2) 903691
Telex: 334632
A,CM,CP,E,MP,P

Hewlett-Packard Italiana S.p.A.
Via Nuova san Rocco A
Capodimonte, 62/A
I-80131 **NAPOLI**
Tel: (081) 7413544
A,CM,CS,E

Hewlett-Packard Italiana S.p.A.
Viale G. Modugno 33
I-16156 **GENOVA PEGLI**
Tel: (010) 68-37-07 E,C

Hewlett-Packard Italiana S.p.A.
Via Turazza 14
I-35100 **PADOVA**
Tel: (49) 664888
Telex: 430315
A,CM,CS,E,MS

Hewlett-Packard Italiana S.p.A.
Viale C. Pavese 340
I-00144 **ROMA**
Tel: (06) 54831
Telex: 610514
A,CM,CS,E,MS,P*

Hewlett-Packard Italiana S.p.A.
Corso Giovanni Lanza 94
I-10133 **TORINO**
Tel: (011) 682245, 659308
Telex: 221079
CM,CS,E

JAPAN

Yokogawa-Hewlett-Packard Ltd.
Inoue Building
1348-3, Asahi-cho
ATSUGI, Kanagawa 243
Tel: (0462) 24-0451
CM,C*,E

Yokogawa-Hewlett-Packard Ltd.
3-30-18 Tsuruya-cho
Kanagawa-ku, Yokohama-Shi
KANAGAWA, 221
Tel: (045) 312-1252
Telex: 382-3204 YHP YOK
CM,CS,E

Yokogawa-Hewlett-Packard Ltd.
Sannomiya-Daiichi Seimei-Bldg. 5F
69 Kyo-Machi Ikuta-Ku
KOBE CITY 650 Japan
Tel: (078) 392-4791
C,E

Yokogawa-Hewlett-Packard Ltd.
Kumagaya Asahi Yasoji Bldg 4F
4-3 Chome Tsukuba
KUMAGAYA, Saitama 360
Tel: (0485) 24-6563
CM,CS,E

Yokogawa-Hewlett-Packard Ltd.
Mito Mitsui Building
4-73, San-no-maru, 1-chome
MITO, Ibaragi 310
Tel: (0292) 25-7470
CM,CS,E

Yokogawa-Hewlett-Packard Ltd.
Sumitomo Seimei Bldg.
11-2 Shimo-sasajima-cho
Nakamura-ku
NAGOYA, Aichi 450
Tel: (052) 581-1850
CM,CS,E,MS

Yokogawa-Hewlett-Packard Ltd.
Chuo Bldg., 4th Floor
5-4-20 Nishinakajima, 5-chome
Yodogawa-ku, Osaka-shi
OSAKA, 532
Tel: (06) 304-6021
Telex: YHPOSA 523-3624
A,CM,CP,E,MP,P*

Yokogawa-Hewlett-Packard Ltd.
29-21 Takaido-Higashi 3-chome
Suginami-ku **TOKYO** 168
Tel: (03) 331-6111
Telex: 232-2024 YHPTOK
A,CM,CP,E,MP,P*

JORDAN

Mouasher Cousins Company
P.O. Box 1387
AMMAN
Tel: 24907, 39907
Telex: 21456 SABCO JO
E,M,P

KOREA

Samsung Electronics
4759 Shinkil, 6 Dong
Youngdeungpo-Ku,
SEOUL
Tel: 8334311, 8334312
Telex: SAMSAN 27364
A,C,E,M,P

KUWAIT

Al-Khalidya Trading & Contracting
P.O. Box 830 Safat
KUWAIT
Tel: 42-4910, 41-1726
Telex: 2481 Areeg kt
A,E,M

Photo & Cine Equipment
P.O. Box 270 Safat
KUWAIT
Tel: 42-2846, 42-3801
Telex: 2247 Matin
P

LUXEMBOURG

Hewlett-Packard Belgium S.A./N.V.
Blvd de la Woluwe, 100
Woluwedal
B-1200 ***BRUSSELS***
Tel: (02) 762-32-00
Telex: 23-494 paloben bru
A,CM,CP,E,MP,P

MALAYSIA

Hewlett-Packard Sales (Malaysia)
Sdn. Bhd.
Suite 2.21/2.22
Bangunan Angkasa Raya
Jalan Ampang
KUALA LUMPUR
Tel: 483544
Telex: MA31011
A,CP,E,M,P*

Protel Engineering
Lot 319, Satok Rd.
P.O. Box 1917
KUCHING, SARAWAK
Tel: 535-44
Telex: MA 70904 Promal
Cable: Proteleng
A,E,M

MEXICO

Hewlett-Packard Mexicana, S.A. de C.V.
Avenida Periferico Sur No. 6501
Tepepan, Xochimilco
MEXICO CITY 23, D.F.
Tel: (905) 676-4600
Telex: 017-74-507
A,CP,E,MS,P

Hewlett-Packard Mexicana, S.A. de C.V.
Rio Volga 600
Colonia del Valle
MONTERREY, N.L.
Tel: 78-42-93, 78-42-40, 78-42-41
Telex: 038-410
CS

MOROCCO

Dolbeau
81 rue Karatchi
CASABLANCA
Tel: 3041-82, 3068-38
Telex: 23051, 22822
E

Gerep
2 rue d'Agadir
Boite Postale 156
CASABLANCA
Tel: 272093, 272095
Telex: 23 739
P

NETHERLANDS

Hewlett-Packard Nederland B.V.
Van Heuven Goedhartlaan 121
NL 1181KK **AMSTELVEEN**
P.O. Box 667
NL1080 AR **AMSTELVEEN**
Tel: (20) 47-20-21
Telex: 13 216
A,CM,CP,E,MP,P

Hewlett-Packard Nederland B.V.
Bongerd 2
NL 2906VK **CAPPELLE**, A/D Ijessel
P.O. Box 41
NL2900 AA **CAPELLE**, Ijssel
Tel: (10) 51-64-44
Telex: 21261 HEPAC NL
A,CM,CP

NEW ZEALAND

Hewlett-Packard (N.Z.) Ltd.
169 Manukau Road
P.O. Box 26-189
Epsom, **AUCKLAND**
Tel: 68-7159
Cable: HEWPACK Auckland
CM,CS,E,P*

Hewlett-Packard (N.Z.) Ltd.
4-12 Cruickshank Street
P.O. Box 9443
Kilbirnie, **WELLINGTON** 3
Tel: 877-199
Cable: HEWPACK Wellington
CM,CP,E,P

Northrop Instruments & Systems Ltd.
Eden House, 44 Khyber Pass Road
P.O. Box 9682
Newmarket, ***AUCKLAND***
Tel: 794-091
A,M

Northrop Instruments & Systems Ltd.
Terrace House, 4 Oxford Terrace
P.O. Box 8388
CHRISTCHURCH
Tel: 64-165
A,M

Northrop Instruments & Systems Ltd.
Sturdee House
85-87 Ghuznee Street
P.O. Box 2406
WELLINGTON
Tel: 850-091
Telex: NZ 3380
A,M

NIGERIA

The Electronics Instrumentations Ltd.
N6B/S70 Oyo Road
Oluseun House
P.M.B. 5402
IBADAN
Tel: 461577
Telex: 31231 TEIL NG
A,E,M,P

The Electronics Instrumentations Ltd.
144 Agege Motor Road, Mushin
P.O. Box 6645
Mushin, ***LAGOS***
A,E,M,P

NORTHERN IRELAND

Cardiac Services Company
95A Finaghy Road South
BELFAST *BT 10 OBY*
Tel: (0232) 625-566
Telex: 747626
M

NORWAY

Hewlett-Packard Norge A/S
Folke Bernadottesvei 50
P.O. Box 3558
N-5033 **FYLLINGSDALEN** (BERGEN)
Tel: (05) 16-55-40
Telex: 16621 hpnas n
CM,CS,E

Hewlett-Packard Norge A/S
Oesterndalen 18
P.O. Box 34
N-1345 **OESTERAAS**
Tel: (02) 17-11-80
Telex: 16621 hpnas n
A*,CM,CP,E,MS,P

OMAN

Khimji Ramdas
P.O. Box 19
MUSCAT
Tel: 72-22-17, 72-22-25
Telex: 3289 BROKER MB MUSCAT
P

PAKISTAN

Mushko & Company Ltd.
10, Bazar Road
Sector G-6/4
ISLAMABAD
Tel: 28624
Cable: FEMUS Rawalpindi
A,E,M

Mushko & Company Ltd.
Oosman Chambers
Abdullah Haroon Road
KARACHI *0302*
Tel: 511027, 512927
Telex: 2894 MUSHKO PW
Cable: COOPERATOR Karachi
*A,E,M,P**

PANAMA

Electrónico Balboa, S.A.
Apartado 4929
Panama 5
Calle Samuel Lewis
Edificio "Alfa" No. 2
CIUDAD DE PANAMA
Tel: 64-2700
Telex: 3480380
Cable: ELECTRON Panama
A,CM,E,M,P

Foto Internacional, S.A.
P.O. Box 2068
Free Zone of Colon
COLON 3
Tel: 45-2333
Telex: 3485126
Cable: IMPORT COLON/Panama
P

PERU

Cómpania Electro Médica S.A.
Los Flamencos 145, San Isidro
Casilla 1030
LIMA *1*
Tel: 41-4325
Telex: Pub. Booth 25424 SISIDRO
Cable: ELMED Lima
A,CM,E,M,P

PHILIPPINES

The Online Advanced Systems Corporation
Rico House, Amorsolo Cor. Herrera Street
Legaspi Village, Makati
P.O. Box 1510
Metro ***MANILA***
Tel: 85-35-81, 85-34-91, 85-32-21
Telex: 3274 ONLINE
A,C,E,M

Electronic Specialists and Proponents Inc.
690-B Epifanio de los Santos Avenue
Cubao, ***QUEZON CITY***
P.O. Box 2649 Manila
Tel: 98-96-81, 98-96-82, 98-96-83
Telex: 742-40287
P

POLAND

Buro Informasji Technicznej
Hewlett-Packard
Ul Stawki 2, 6P
PL00-950 ***WARSZAWA***
Tel: 39-59-62, 39-67-43
Telex: 812453 hepa pl

SALES & SUPPORT OFFICES

Arranged alphabetically by country

PORTUGAL

Telectra-Empresa Técnica de Equipmentos Eléctricos S.a.r.l.
Rua Rodrigo da Fonseca 103
P.O. Box 2531
*P-**LISBON** 1*
Tel: (19) 68-60-72
Telex: 12598
A,C,E,P

Mundinter
Intercambio Mundial de Comércio S.a.r.l
P.O. Box 2761
Avenida Antonio Augusto de Aguiar 138
*P-**LISBON***
Tel: (19) 53-21-31, 53-21-37
Telex: 16691 munter p
M

PUERTO RICO

Hewlett-Packard Puerto Rico
P.O. Box 4407
CAROLINA, Puerto Rico 00630
Calle 272 Edificio 203
Urb. Country Club
RIO PIEDRAS, Puerto Rico 00924
Tel: (809) 762-7255
Telex: 345 0514
A,CP

QATAR

Nasser Trading & Contracting
P.O. Box 1563
DOHA
Tel: 22170
Telex: 4439 NASSER
M

Scitecharabia
P.O. Box 2750
!'DOHA
Tel: 329515
Telex: 4806 CMPARB
P

ROMANIA

Hewlett-Packard Reprezentanta
Boulevard Nicolae Balcescu 16
BUCURESTI
Tel: 130725
Telex: 10440

SAUDI ARABIA

Modern Electronic Establishment
P.O. Box 193
AL-KHOBAR
Tel: 44-678, 44-813
Telex: 670136
Cable: ELECTA AL-KHOBAR
C,E,M,P

Modern Electronic Establishment
P.O. Box 1228, Baghdadiah Street
JEDDAH
Tel: 27-798
Telex: 401035
Cable: ELECTA JEDDAH
C,E,M,P

Modern Electronic Establishment
P.O. Box 2728
RIYADH
Tel: 62-596, 66-232
Telex: 202049
C,E,M,P

SCOTLAND

Hewlett-Packard Ltd.
Royal Bank Buildings
Swan Street
BRECHIN, Angus, Scotland
Tel: 3101, 3102
CM,CS

Hewlett-Packard Ltd.
SOUTH QUEENSFERRY
West Lothian, EH30 9TG
GB-Scotland
Tel: (031) 3311000
Telex: 72682
A,CM,E,M

SINGAPORE

Hewlett-Packard Singapore (Pty.) Ltd.
P.O. Box 58 Alexandra Post Office
SINGAPORE, 9115
6th Floor, Inchcape House
450-452 Alexandra Road
SINGAPORE 0511
Tel: 631788
Telex: HPSGSO RS 34209
Cable: HEWPACK, Singapore
A,CP,E,MS,P

SOUTH AFRICA

Hewlett-Packard South Africa (Pty.) Ltd.
P.O. Box 120
Howard Place
Pine Park Center, Forest Drive, Pinelands
CAPE PROVINCE 7450
Tel: 53-7955, 53-7956, 53-7957
Telex: 57-0006
A,CM,CS,E,MS,P

Hewlett-Packard South Africa (Pty.) Ltd.
P.O. Box 37066
Overport
DURBAN 4067
Tel: 28-4178, 28-4179, 28-4110
CM,CS

Hewlett-Packard South Africa (Pty.) Ltd.
P.O. Box 33345
Glenstantia 0010 **TRANSVAAL**
1st Floor East
Constantia Park Ridge Shopping Centre
Constantia Park
PRETORIA Tel: 98-1126 or 98-1220
Telex: 32163
C,E

Hewlett-Packard South Africa (Pty.) Ltd.
Daphny Street
Private Bag Wendywood
SANDTON 2144
Tel: 802-5111, 802-5125
Telex: 89-84782
Cable: HEWPACK Johannesburg
A,CM,CP,E,MS,P

SPAIN

Hewlett-Packard Española S.A.
c/Entenza, 321
E-**BARCELONA** 29
Tel: (3) 322-24-51, 321-73-54
Telex: 52603 hpbee
A,CM,CP,E,MS,P

Hewlett-Packard Española S.A.
c/San Vicente S/N
Edificio Albia II,7 B
E-**BILBAO** 1
Tel: (944) 423-8306, 423-8206
A,CM,E,MS

Hewlett-Packard Española S.A.
Calle Jerez 3
E-**MADRID** 16
Tel: 458-2600
Telex: 23515 hpe
A,CM,E,MP,P

Hewlett-Packard Española S.A.
Colonia Mirasierra
Edificio Juban
c/o Costa Brava 13, 2.
E-**MADRID** 34
Tel: 734-8061, 734-1162
CM,CP

Hewlett-Packard Española S.A.
Av Ramón y Cajal 1-9
Edificio Sevilla 1,
E-**SEVILLA** 5
Tel: 64-44-54, 64-44-58
Telex: 72933
A,CM,CS,MS,P

Hewlett-Packard Española S.A.
C/Ramon Gordillo, 1 (Entlo.3)
E-**VALENCIA** 10
Tel: 361-1354, 361-1358
CM,CS,P

SWEDEN

Hewlett-Packard Sverige AB
Enighetsvägen 3, Fack
P.O. Box 20502
S-16120 **BROMMA**
Tel: (08) 730-0550
Telex: (854) 10721 MESSAGES
Cable: MEASUREMENTS STOCKHOLM
A,CM,CP,E,MS,P

Hewlett-Packard Sverige AB
Sunnanvagen 14K
S-22226 **LUND**
Tel: (46) 13-69-79
Telex: (854) 10721 (via BROMMA office)
CM,CS

Hewlett-Packard Sverige AB
Vastra Vintergatan 9
S-70344 **OREBRO**
Tel: (19) 10-48-80
Telex: (854) 10721 (via BROMMA office)
CM,CS

Hewlett-Packard Sverige AB
Frötallisgatan 30
S-42132 **VÄSTRA-FRÖLUNDA**
Tel: (031) 49-09-50
Telex: (854) 10721 (via BROMMA office)
CM,CS,E,P

SWITZERLAND

Hewlett-Packard (Schweiz) AG
Clarastrasse 12
CH-4058 **BASLE**
Tel: (61) 33-59-20
A,CM

Hewlett-Packard (Schweiz) AG
47 Avenue Blanc
CH-1202 **GENEVA**
Tel: (022) 32-30-05, 32-48-00
CM,CP

Hewlett-Packard (Schweiz) AG
29 Chemin Château Bloc
CH-1219 **LE LIGNON**-Geneva
Tel: (022) 96-03-22
Telex: 27333 hpag ch
Cable: HEWPACKAG Geneva
A,CM,E,MS,P

Hewlett-Packard (Schweiz) AG
ZÜrcherstrasse 20
Allmend 2
CH-8967 **WIDEN**
Tel: (57) 50-111
Telex: 59933 hpag ch
Cable: HPAG CH
A,CM,CP,E,MS,P

SYRIA

General Electronic Inc.
Nuri Basha-Ahnat Ebn Kays Street
P.O. Box 5781
DAMASCUS
Tel: 33-24-87
Telex: 11215 ITIKAL
Cable: ELECTROBOR DAMASCUS
E

Sawah & Co.
Place Azmé
Boite Postale 2308
DAMASCUS
Tel: 16-367, 19-697, 14-268
Telex: 11304 SATACO SY
Cable: SAWAH, DAMASCUS
M

TAIWAN

Hewlett-Packard Far East Ltd.
Kaohsiung Branch
68-2, Chung Cheng 3rd Road
Shin Shin, Chu
KAOHSIUNG
Tel: 24-2318, 26-3253
CS,E,MS,P

Hewlett-Packard Far East Ltd.
Taiwan Branch
5th Floor
205 Tun Hwa North Road
TAIPEI
Tel:(02) 751-0404
Cable:HEWPACK Taipei
A,CP,E,MS,P

Hewlett-Packard Far East Ltd.
Taichung Branch
#33, Cheng Yih Street
10th Floor, Room 5
TAICHUNG
Tel: 289274

Ing Lih Trading Co.
3rd Floor 18, Po-la Road
TAIPEI
Tel:
Telex:
Cable: INGLIH TAIPEI
A

THAILAND

UNIMESA Co. Ltd.
Elcom Research Building
2538 Sukhumvit Ave.
*Bangchak, **BANGKOK***
Tel: 393-2387, 393-0338
Telex: TH81160, 82938, 81038
Cable: UNIMESA Bangkok
A,C,E,M

Bangkok Business Equipment Ltd.
5/5-6 Dejo Road
BANGKOK
Tel: 234-8670, 234-8671, 234-8672
Cable: BUSIQUIPT Bangkok
P

TRINIDAD & TOBAGO

Caribbean Telecoms Ltd.
P.O. Box 732
50/A Jerningham Avenue
PORT-OF-SPAIN
Tel: 624-4213, 624-4214
A,CM,E,M,P

TUNISIA

Tunisie Electronique
31 Avenue de la Liberte
TUNIS
Tel: 280-144
E,P

Corema
1 ter. Av. de Carthage
TUNIS
Tel: 253-821
Telex: 12319 CABAM TN
M

TURKEY

Teknim Company Ltd.
Riza Sah Pehievi
Caddesi No. 7
*Kavaklidere, **ANKARA***
Tel: 275800
Telex: 42155
E

EMA, Muhendislik Kollektif Sirketi
Mediha Eldem
Sokak 41/6
*Yüksel Caddesi, **ANKARA***
Tel: 17-56-22
Cable: Ematrade
M

UNITED ARAB EMIRATES

Emitac Ltd.
P.O. Box 1641
SHARJAH
Tel: 354121, 354123
Telex: 68136
E,M,P,C

UNITED KINGDOM

see: GREAT BRITAIN NORTHERN IRELAND SCOTLAND

UNITED STATES

Alabama

Hewlett-Packard Co.
700 Century Park South
Suite 128
BIRMINGHAM, AL 35226
Tel: (205) 822-6802
CM,CS,MP

Hewlett-Packard Co.
P.O. Box 4207
8290 Whitesburg Drive, S.E.
HUNTSVILLE, AL 35802
Tel: (205) 881-4591
CM,CP,E,M*

Alaska

Hewlett-Packard Co.
1577 "C" Street, Suite 252
ANCHORAGE, AK 99510
Tel: (206) 454-3971
CM,CS**

Arizona

Hewlett-Packard Co.
2336 East Magnolia Street
PHOENIX, AZ 85034
Tel: (602) 273-8000
A,CM,CP,E,MS

Hewlett-Packard Co.
2424 East Aragon Road
TUCSON, AZ 85702
Tel: (602) 889-4631
CM,CS,E,MS**

Arkansas

Hewlett-Packard Co.
P.O. Box 5646
Brady Station
LITTLE ROCK, AR 72215
Tel: (501) 376-1844, (501) 664-8773
CM,MS

SALES & SUPPORT OFFICES

Arranged alphabetically by country

UNITED STATES (Cont.)

California

Hewlett-Packard Co.
7621 Canoga Avenue
CANOGA PARK, CA 91304
Tel: (213) 702-8300
A,CM,CP,E,P

Hewlett-Packard Co.
1579 W. Shaw Avenue
FRESNO, CA 93771
Tel: (209) 224-0582
CM,MS

Hewlett-Packard Co.
1430 East Orangethorpe
FULLERTON, CA 92631
Tel: (714) 870-1000
CM,CP,E,MP

Hewlett-Packard Co.
5400 W. Rosecrans Boulevard
LAWNDALE, CA 90260
P.O. Box 92105
LOS ANGELES, CA 90009
Tel: (213) 970-7500
CM,CP,MP

Hewlett-Packard Co.
3939 Lankershim Blvd.
NORTH HOLLYWOOD, CA 91604
Tel: (213) 877-1282
Regional Headquarters

Hewlett-Packard Co.
3200 Hillview Avenue
PALO ALTO, CA 94304
Tel: (415) 857-8000
CM,CP,E

Hewlett-Packard Co.
646 W. North Market Boulevard
SACRAMENTO, CA 95834
Tel: (916) 929-7222
A*,CM,CP,E,MS

Hewlett-Packard Co.
9606 Aero Drive
P.O. Box 23333
SAN DIEGO, CA 92123
Tel: (714) 279-3200
CM,CP,E,MP

Hewlett-Packard Co.
3003 Scott Boulevard
SANTA CLARA, CA 95050
Tel: (408) 988-7000
A,CM,CP,E,MP

Hewlett-Packard Co.
454 Carlton Court
SO. SAN FRANCISCO, CA 94080
Tel: (415) 877-0772
CM,CP

Colorado

Hewlett-Packard Co.
24 Inverness Place, East
ENGLEWOOD, CO 80112
Tel: (303) 771-3455
A,CM,CP,E,MS

Connecticut

Hewlett-Packard Co.
47 Barnes Industrial Road South
P.O. Box 5007
WALLINGFORD, CT 06492
Tel: (203) 265-7801
A,CM,CP,E,MS

Florida

Hewlett-Packard Co.
P.O. Box 24210
2727 N.W. 62nd Street
FORT LAUDERDALE, FL 33309
Tel: (305) 973-2600
CM,CP,E,MP

Hewlett-Packard Co.
4080 Woodcock Drive, #132
Brownett Building
JACKSONVILLE, FL 32207
Tel: (904) 398-0663
CM,C*,E*,MS**

Hewlett-Packard Co.
P.O. Box 13910
6177 Lake Ellenor Drive
ORLANDO, FL 32809
Tel: (305) 859-2900
A,CM,CP,E,MS

Hewlett-Packard Co.
6425 N. Pensacola Blvd.
Suite 4, Building 1
PENSACOLA, FL 32575
Tel: (904) 476-8422
A,CM,MS

Hewlett-Packard Co.
110 South Hoover, Suite 120
Vanguard Bldg.
TAMPA, FL 33609
Tel: (813) 872-0900
A*,CM,CS,E*,M*

Georgia

Hewlett-Packard Co.
P.O. Box 105005
2000 South Park Place
ATLANTA, GA 30339
Tel: (404) 955-1500
Telex: 810-766-4890
A,CM,CP,E,MP

Hewlett-Packard Co.
Executive Park Suite 306
P.O. Box 816
AUGUSTA, GA 30907
Tel: (404) 736-0592
CM,MS

Hewlett-Packard Co.
P.O. Box 2103
1172 N. Davis Drive
WARNER ROBINS, GA 31098
Tel: (912) 922-0449
CM,E

Hawaii

Hewlett-Packard Co.
Kawaiahao Plaza, Suite 190
567 South King Street
HONOLULU, HI 96813
Tel: (808) 526-1555
A,CM,CS,E,MS

Idaho

Hewlett-Packard Co.
11311 Chinden Boulevard
BOISE, ID 83707
Tel: (208) 376-6000
CM,CS,M*

Illinois

Hewlett-Packard Co.
211 Prospect Road
BLOOMINGTON, IL 61701
Tel: (309) 663-0383
CM,CS,MS**

Hewlett-Packard Co.
1100 31st Street
DOWNERS GROVE, IL 60515
Tel: (312) 960-5760
CM,CP

Hewlett-Packard Co.
5201 Tollview Drive
ROLLING MEADOWS, IL 60008
Tel: (312) 255-9800
A,CM,CP,E,MP

Indiana

Hewlett-Packard Co.
P.O. Box 50807
7301 No. Shadeland Avenue
INDIANAPOLIS, IN 46250
Tel: (317) 842-1000
A,CM,CS,E,MS

Iowa

Hewlett-Packard Co.
2415 Heinz Road
IOWA CITY, IA 52240
Tel: (319) 351-1020
CM,CS,E*,MS

Kansas

Hewlett-Packard Co.
1644 S. Rock
WICHITA, KA 67207
Tel: (316) 265-5200
CM,CS

Kentucky

Hewlett-Packard Co.
10170 Linn Station Road
Suite 525
LOUISVILLE, KY 40223
Tel: (502) 426-0100
A,CM,CS,MS

Louisiana

Hewlett-Packard Co.
P.O. Box 1449
3229 Williams Boulevard
KENNER, LA 70062
Tel: (504) 443-6201
A,CM,CS,E,MS

Maryland

Hewlett-Packard Co.
7121 Standard Drive
HANOVER, MD 21076
Tel: (301) 796-7700
A,CM,CP,E,MS

Hewlett-Packard Co.
2 Choke Cherry Road
ROCKVILLE, MD 20850
Tel: (301) 948-6370
Telex: 710-828-9685
A,CM,CP,E,MP

Massachusetts

Hewlett-Packard Co.
32 Hartwell Avenue
LEXINGTON, MA 02173
Tel: (617) 861-8960
A,CM,CP,E,MP

Michigan

Hewlett-Packard Co.
23855 Research Drive
FARMINGTON HILLS, MI 48024
Tel: (313) 476-6400
A,CM,CP,E,MP

Hewlett-Packard Co.
4326 Cascade Road S.E.
GRAND RAPIDS, MI 49506
Tel: (616) 957-1970
CM,CS,MS

Minnesota

Hewlett-Packard Co.
2025 W. Larpenteur Ave.
ST. PAUL, MN 55113
Tel: (612) 644-1100
A,CM,CP,E,MP

Mississippi

Hewlett-Packard Co.
P.O. Box 5028
322 N. Mart Plaza
JACKSON, MS 39216
Tel: (601) 982-9363
CM,MS

Missouri

Hewlett-Packard Co.
11131 Colorado Avenue
KANSAS CITY, MO 64137
Tel: (816) 763-8000
Telex: 910-771-2087
A,CM,CS,E,MS

Hewlett-Packard Co.
1024 Executive Parkway
ST. LOUIS, MO 63141
Tel: (314) 878-0200
A,CM,CP,E,MP

Nebraska

Hewlett-Packard
7101 Mercy Road
Suite 101, IBX Building
OMAHA, NE 68106
Tel: (402) 392-0948
CM,MS

Nevada

Hewlett-Packard Co.
Suite D-130
5030 Paradise Blvd.
LAS VEGAS, NV 89119
Tel: (702) 736-6610
CM,MS**

New Jersey

Hewlett-Packard Co.
Crystal Brook Professional Building
Route 35
EATONTOWN, NJ 07724
Tel: (201) 542-1384
A*,CM,C*,E*,P*

Hewlett-Packard Co.
W120 Century Road
PARAMUS, NJ 07652
Tel: (201) 265-5000
A,CM,CP,E,MP

Hewlett-Packard Co.
60 New England Avenue West
PISCATAWAY, NJ 08854
Tel: (201) 981-1199
A,CM,CP,E

New Mexico

Hewlett-Packard Co.
P.O. Box 11634
11300 Lomas Blvd.,N.E.
ALBUQUERQUE, NM 87123
Tel: (505) 292-1330
Telex: 910-989-1185
CM,CP,E,MS

New York

Hewlett-Packard Co.
5 Computer Drive South
ALBANY, NY 12205
Tel: (518) 458-1550
Telex: 710-444-4691
A,CM,CS,E,MS

Hewlett-Packard Co.
9600 Main Street
CLARENCE, NY 14031
Tel: (716) 759-8621
Telex: 710-523-1893

Hewlett-Packard Co.
200 Cross Keys Office
FAIRPORT, NY 14450
Tel: (716) 223-9950
Telex: 510-253-0092
CM,CP,E,MS

Hewlett-Packard Co.
No. 1 Pennsylvania Plaza
55th Floor
34th Street & 8th Avenue
NEW YORK, NY 10119
Tel: (212) 971-0800
CM,CP,E*,M*

Hewlett-Packard Co.
5858 East Molloy Road
SYRACUSE NY 13211
Tel: (315) 455-2486
A,CM,CS,E,MS

Hewlett-Packard Co.
3 Crossways Park West
WOODBURY, NY 11797
Tel: (516) 921-0300
Telex: 510-221-2183
A,CM,CP,E,MS

North Carolina

Hewlett-Packard Co.
P.O. Box 15579
2905 Guess Road (27705)
DURHAM, NC 27704
Tel: (919) 471-8466
C,M

Hewlett-Packard Co.
5605 Roanne Way
GREENSBORO, NC 27409
Tel: (919) 852-1800
A,CM,CP,E,MS

Ohio

Hewlett-Packard Co.
9920 Carver Road
CINCINNATI, OH 45242
Tel: (513) 891-9870
CM,CP,MS

Hewlett-Packard Co.
16500 Sprague Road
CLEVELAND, OH 44130
Tel: (216) 243-7300
Telex: 810-423-9430
A,CM,CP,E,MS

Hewlett-Packard Co.
962 Crupper Ave.
COLUMBUS, OH 43229
Tel: (614) 436-1041
CM,CP,E*

Hewlett-Packard Co.
330 Progress Rd.
DAYTON, OH 45449
Tel: (513) 859-8202
A,CM,CP,E*,MS

Oklahoma

Hewlett-Packard Co.
P.O. Box 366
1503 W. Gore Blvd., Suite #2
LAWTON, OK 73502
Tel: (405) 248-4248
C

Hewlett-Packard Co.
P.O. Box 32008
304 N. Meridan Avenue, Suite A
OKLAHOMA CITY, OK 73107
Tel: (405) 946-9499
A*,CM,CP,E*,MS

Hewlett-Packard Co.
Suite 121
9920 E. 42nd Street
TULSA, OK 74145
Tel: (918) 665-3300
A**,CM,CS,M*

Oregon

Hewlett-Packard Co.
1500 Valley River Drive, Suite 330
EUGENE, OR 97401
Tel: (503) 683-8075
C

Hewlett-Packard Co.
9255 S. W. Pioneer Court
WILSONVILLE, OR 97070
Tel: (503) 682-8000
A,CM,CP,E*,MS

Pennsylvania

Hewlett-Packard Co.
1021 8th Avenue
King of Prussia Industrial Park
KING OF PRUSSIA, PA 19406
Tel: (215) 265-7000
Telex: 510-660-2670
A,CM,CP,E,MP

Hewlett-Packard Co.
111 Zeta Drive
PITTSBURGH, PA 15238
Tel: (412) 782-0400
A,CM,CP,E,MP

South Carolina

Hewlett-Packard Co.
P.O. Box 6442
6941-0 N. Trenholm Road
COLUMBIA, SC 29260
Tel: (803) 782-6493
CM,CS,E,MS

6

SALES & SUPPORT OFFICES

Arranged alphabetically by country

UNITED STATES (Cont.)

South Carolina (Cont.)
Hewlett-Packard Co.
814 Wade Hampton Blvd.
Suite 10
GREENVILLE, SC 29609
Tel: (803) 232-0917
C

Tennessee
Hewlett-Packard Co.
P.O. Box 22490
224 Peters Road
Suite 102
KNOXVILLE, TN 37922
Tel: (615) 691-2371
A*,CM,MS

Hewlett-Packard Co.
3070 Directors Row
MEMPHIS, TN 38131
Tel: (901) 346-8370
A,CM,CS,MS

Hewlett-Packard Co.
Suite 103
478 Craighead Street
NASHVILLE, TN 37204
Tel: (615) 383-9136
CM,MS**

Texas
Hewlett-Packard Co.
Suite 310W
7800 Shoalcreek Blvd.
AUSTIN, TX 78757
Tel: (512) 459-3143
CM,E

Hewlett-Packard Co.
Suite C-110
4171 North Mesa
EL PASO, TX 79902
Tel: (915) 533-3555
CM,CS,E*,MS**

Hewlett-Packard Co.
5020 Mark IV Parkway
FORT WORTH, TX 76106
Tel: (817) 625-6361
CM,C*

Hewlett-Packard Co.
P.O. Box 42816
10535 Harwin Street
HOUSTON, TX 77036
Tel: (713) 776-6400
A,CM,CP,E,MP

Hewlett-Packard Co.
3309 67th Street
Suite 24
LUBBOCK, TX 79413
Tel: (806) 799-4472
M

Hewlett-Packard Co.
P.O. Box 1270
930 E. Campbell Rd.
RICHARDSON, TX 75081
Tel: (214) 231-6101
A,CM,CP,E,MP

Hewlett-Packard Co.
205 Billy Mitchell Road
SAN ANTONIO, TX 78226
Tel: (512) 434-8241
CM,CS,E,MS

Utah
Hewlett-Packard Co.
3530 W. 2100 South Street
SALT LAKE CITY, UT 84119
Tel: (801) 974-1700
A,CM,CP,E,MS

Virginia
Hewlett-Packard Co.
P.O. Box 9669
2914 Hungary Spring Road
RICHMOND, VA 23228
Tel: (804) 285-3431
A,CM,CP,E,MS

Hewlett-Packard Co.
P.O. Box 4786
3110 Peters Creek Road, N.W.
ROANOKE, VA 24015
Tel: (703) 563-2205
CM,CS,E**

Hewlett-Packard Co.
P.O. Box 12778
5700 Thurston Avenue
Suite 111
VIRGINIA BEACH, VA 23455
Tel: (804) 460-2471
CM,CS,MS

Washington
Hewlett-Packard Co.
15815 S.E. 37th Street
BELLEVUE, WA 98006
Tel: (206) 643-4000
A,CM,CP,E,MP

Hewlett-Packard Co.
Suite A
708 North Argonne Road
SPOKANE, WA 99206
Tel: (509) 922-7000
CM,CS

West Virginia
Hewlett-Packard Co.
4604 MacCorkle Ave., S.E.
CHARLESTON, WV 25304
Tel: (304) 925-0492
A,CM,MS

Wisconsin
Hewlett-Packard Co.
150 S. Sunny Slope Road
BROOKFIELD, WI 53005
Tel: (414) 784-8800
A,CM,CS,E*,MP

URUGUAY

Pablo Ferrando S.A.C. e.I.
Avenida Italia 2877
Casilla de Correo 370
MONTEVIDEO
Tel: 403102
Telex: 901 Public Booth Para Pablo Ferrando 919520
Cable: RADIUM Montevideo
A,CM,E,M

Guillermo Kraft del Uruguay S.A.
Avda. Libertador Brig. Gral.
Lavalleja 2083
MONTEVIDEO
Tel: 234588, 234808, 208830
Telex: 6245 ACTOUR UY
P

U.S.S.R.

Hewlett-Packard Co.
Representative Office
Pokrovsky Blvd. 4/17 KV12
MOSCOW 101000 Tel: 294-2024
Telex: 7825 HEWPACK SU

VENEZUELA

Hewlett-Packard de Venezuela C.A.
Apartado 50933
3A Transversal Los Ruices Norte
Edificio Segre 2Y3
CARACAS 1071
Tel: 239-4133, 239-4777, 239-4244
Telex: 25146 HEWPACK
Cable: HEWPACK Caracas
A,CP,E,MS,P

YUGOSLAVIA

Iskra-Commerce-Representation of Hewlett-Packard
Sava Centar Delegacija 30
Milentija Popovica 9
*11170 **BEOGRAD***
Tel: 638-762
Telex: 12042, 12322 YU SAV CEN

Iskra-Commerce-Representation of Hewlett-Packard
Koprska 46
*61000 **LJUBLJANA***
Tel: 321674, 315879
Telex:

ZAMBIA

R. J. Tilbury (Zambia) Ltd.
P.O. Box 2792
LUSAKA
Tel: 81243
A,E,M,P

ZIMBABWE

Field Technical Sales
45 Kelvin Road, North
P.B. 3458
SALISBURY
Tel:
C,E,M,P

FOR COUNTRIES AND AREAS NOT LISTED:

CANADA

Ontario
Hewlett-Packard (Canada) Ltd.
6877 Goreway Drive
MISSISAUGA, Ontario L4V 1M8
Tel: (416) 678-9430
Telex: 610-492-4246

EASTERN USA

Maryland
Hewlett-Packard Co.
4 Choke Cherry Road
Rockville, MD 20850
Tel: (301) 258-2000

MIDWESTERN USA

Illinois
Hewlett-Packard Co.
5201 Tollview Drive
ROLLING MEADOWS, IL 60008
Tel: (312) 255-9800

SOUTHERN USA

Georgia
Hewlett-Packard Co.
P.O. Box 105005
450 Interstate N. Parkway
ATLANTA, GA 30339
Tel: (404) 955-1500

WESTERN USA

California
Hewlett-Packard Co.
3939 Lankersim Blvd.
LOS ANGELES, CA 91604
Tel: (213) 877-1282

EUROPEAN AREAS NOT LISTED, CONTACT

SWITZERLAND

Hewlett-Packard S.A.
7 Rue du Bois-du-Lan
CH-1217 **MEYRIN 2**, Switzerland
Tel: (022) 83-81-11
Telex: 27835 hpse
Cable: HEWPACKSA Geneve

EAST EUROPEAN AREAS NOT LISTED, CONTACT

AUSTRIA

Hewlett-Packard Ges.m.b.h.
Wehlistrasse 29
P.O. Box 7
A-1205 **VIENNA**
Tel: (222) 35-16-210
Telex: 135823/135066

MEDITERRANEAN AND MIDDLE EAST AREAS NOT LISTED, CONTACT

GREECE

Hewlett-Packard S.A.
Mediterranean & Middle East Operations
35, Kolokotroni Street
Platia Kefallariou
GR-Kifissia, **ATHENS**, Greece
Tel: 808-0359, 808-0429
Telex: 21-6588
Cable: HEWPACKSA Athens

INTERNATIONAL AREAS NOT LISTED, CONTACT

OTHER AREAS

Hewlett-Packard Co.
Intercontinental Headquarters
3495 Deer Creek Road
PALO ALTO, CA 94304
Tel: (415) 857-1501
Telex: 034-8300
Cable: HEWPACK

03468-90000

Printed in U.S.A.

Scan Copyright ©
The Museum of HP Calculators
www.hpmuseum.org

Original content used with permission.

Thank you for supporting the Museum of HP Calculators by purchasing this Scan!

Please to not make copies of this scan or make it available on file sharing services.